MIMO (Space-Time Processing)

Contents

- Fundamentals
- V-Blast
- Improved V-Blast
- Simplified MIMO
- Detection schemes
- Performance in Correlated channel
- Detector implementations
- MIMO Channel capacity
- Waterfilling & SVD
- MIMO Capacity

Fundamentals

- Higher data rate is needed for next generation communications in restricted bandwidth.
  - ⇒ More spectrum efficient modulation technique
- Higher order modulation schemes: Vulnerable to noise and interference.
- Multiple Input Multiple Output (MIMO) System
  - ⇒ Using multiple antennas at Tx & Rx
  - ⇒ Increase channel capacity and enhance performance without bandwidth expansion.

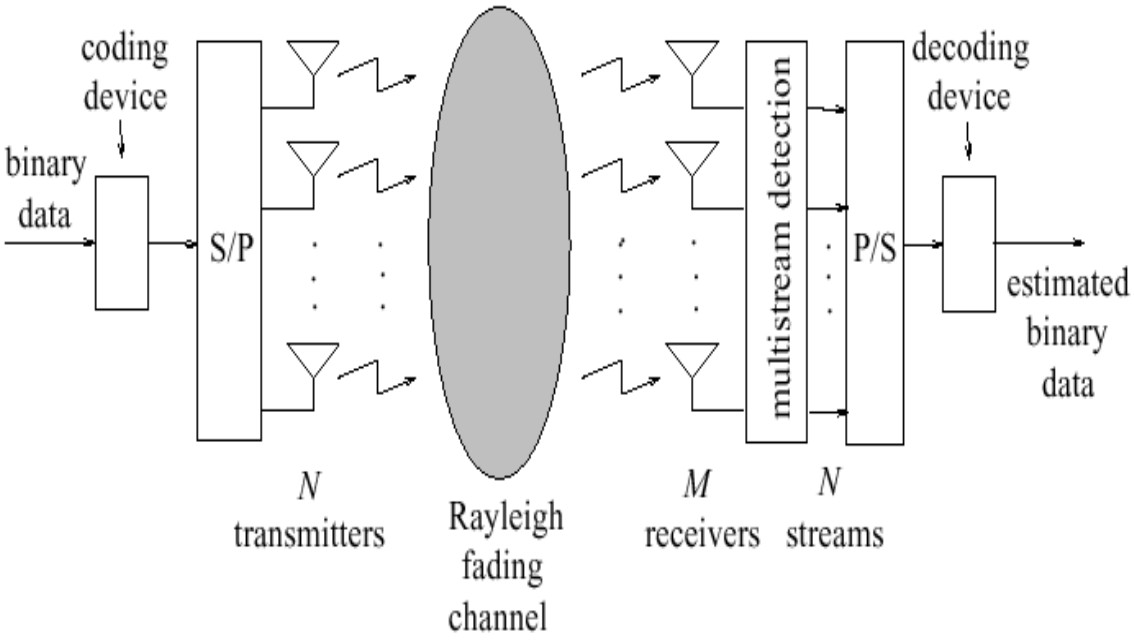
coding
device
binary
data
S/P
N
transmitters
Rayleigh
fading
channel
M
receivers
multistream detection
N
streams
P/S
decoding
device
estimated
binary
data

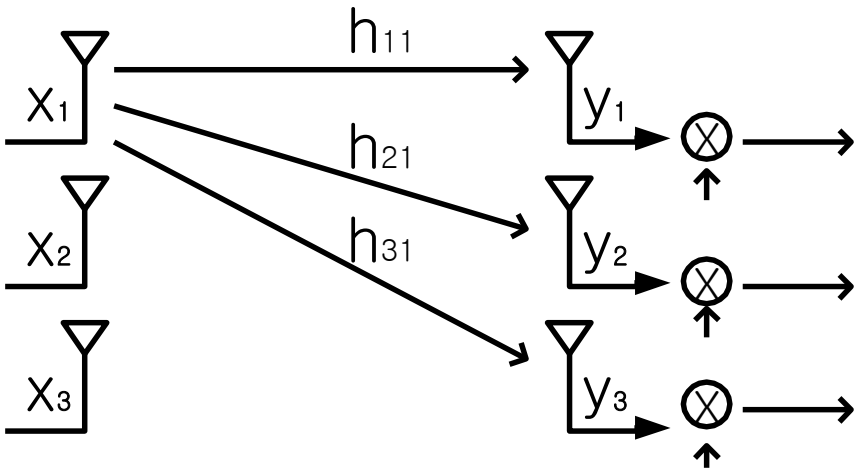

$$\mathbf{y} = \mathbf{H} \cdot \mathbf{x} + \mathbf{n}$$

$$\begin{bmatrix} y_1 \\ y_2 \\ y_3 \end{bmatrix} = \begin{bmatrix} \mathbf{h}_{11} & \mathbf{h}_{12} & \mathbf{h}_{13} \\ \mathbf{h}_{21} & \mathbf{h}_{22} & \mathbf{h}_{23} \\ \mathbf{h}_{31} & \mathbf{h}_{32} & \mathbf{h}_{33} \end{bmatrix} \cdot \begin{bmatrix} x_1 \\ x_2 \\ x_3 \end{bmatrix} + \begin{bmatrix} n_1 \\ n_2 \\ n_3 \end{bmatrix}$$

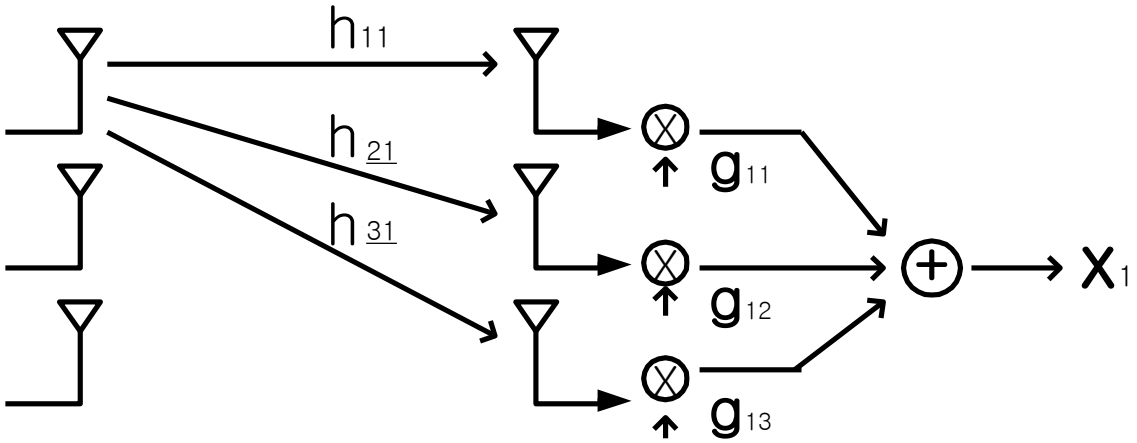
h11
h 21
h 31
g11
g12
g13
x1

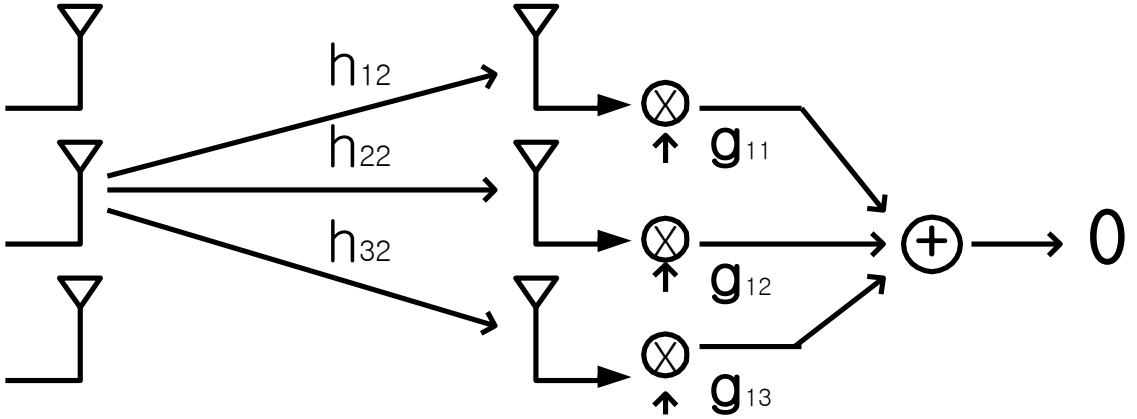
h12
h22
h32
g11
g12
g13
0

$$\begin{bmatrix} \mathbf{g}_{11} & \mathbf{g}_{12} & \mathbf{g}_{13} \\ & \cdot & \\ & \cdot & \end{bmatrix} \begin{bmatrix} \mathbf{h}_{11} & \mathbf{h}_{12} & \mathbf{h}_{13} \\ \mathbf{h}_{21} & \mathbf{h}_{22} & \mathbf{h}_{23} \\ \mathbf{h}_{31} & \mathbf{h}_{32} & \mathbf{h}_{33} \end{bmatrix} = \begin{bmatrix} 1 & 0 & 0 \\ & \cdot & \\ & \cdot & \end{bmatrix} = \mathbf{GH} = \mathbf{H}^{-1}\mathbf{H}$$

If n=0,

$$\mathbf{H}^{-1} = \mathbf{G} = \begin{bmatrix} \mathbf{g}_{11} & \mathbf{g}_{12} & \mathbf{g}_{13} \\ \mathbf{g}_{21} & \mathbf{g}_{22} & \mathbf{g}_{23} \\ \mathbf{g}_{31} & \mathbf{g}_{32} & \mathbf{g}_{33} \end{bmatrix}$$

$$\begin{aligned} \mathbf{H}^{-1}\mathbf{y} &= \mathbf{H}^{-1}(\mathbf{Hx} + n) \\ &\approx \mathbf{x} \end{aligned}$$

V-Blast: Successive Interference Cancellation (MUD)

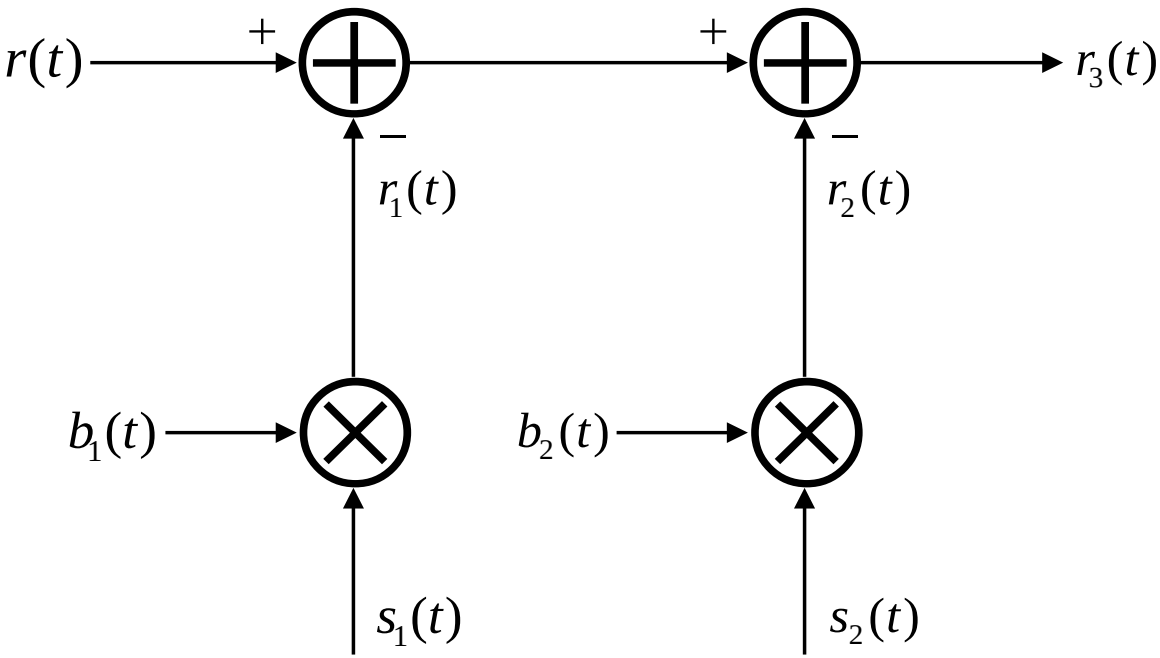

V-BLAST (Ordered Successive Interference Cancellation)

Step 1. Order the transmitted signal

Step 2. Null the interference

Step 3. Detect the desired signal

Step 4. Cancel the detected signal from received vector

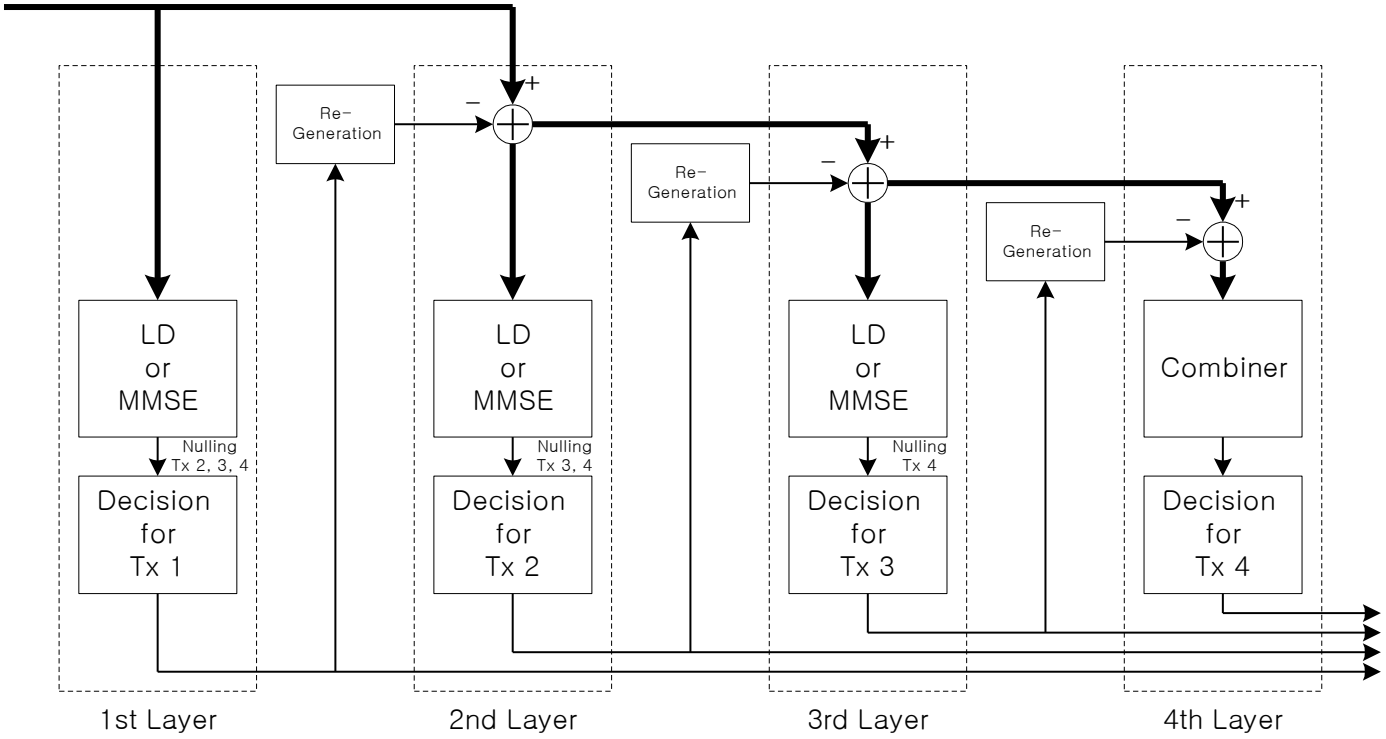

< V-BLAST Receiver for 4 Tx-Antenna Systems >

- Shortcomings of V-BLAST receiver
  - Diversity order
  - Error propagation

Improved V-Blast: Optimal TPA

- Overall BER (Assuming perfect symbol cancellation)

$$P_b(e) = \frac{1}{N}\sum_{i=1}^{N} P_b(e_{k_i}) = \frac{1}{N}\sum_{i=1}^{N} f\left(\frac{P_{k_i}}{\sigma_n^2 \left\|\mathbf{v}_{k_i}\right\|^2}\right)$$

V_{ki}: nulling vector at the *i*th stage

- Cost Function

$$J(P_1, P_2, \cdots, P_N) = P_b(e) - \lambda\left(\sum_{i=1}^{N} P_{k_i} - N\right)$$

- Differentiation of J w.r.t. transmit power P_{k_i}

$$\frac{df}{dP_{k_i}}\left(\frac{P_{k_i}}{\sigma_n^2 \left\|\mathbf{v}_{k_i}\right\|^2}\right) = N\lambda, \quad (i = 1, 2, \ldots, N)$$

Improved V-Blast: Effects of Detection Ordering and TPA

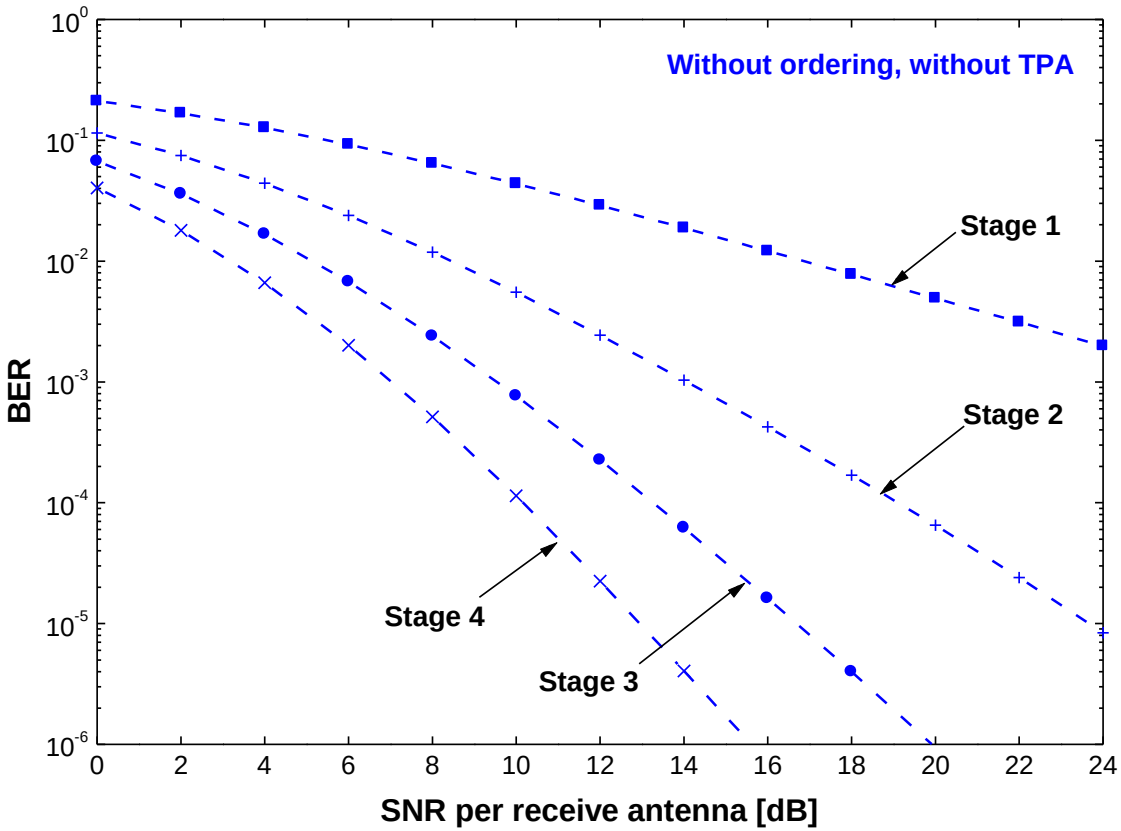

- Small diversity order for low detection stage ➊ Low detection stages dominate the overall performance

Improved V-Blast: Effects of Detection Ordering and TPA

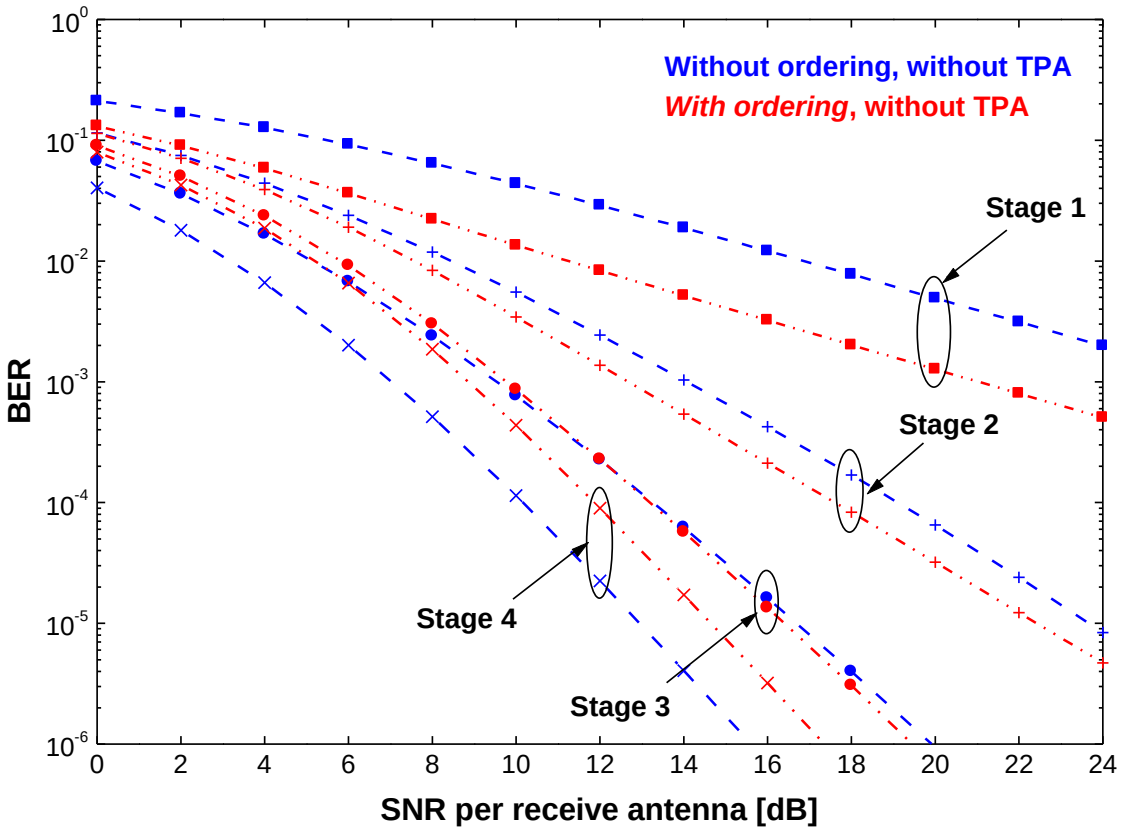

- Detection ordering (1) shifts BER curves, and (2) improves the 1st and 2nd stages, & degrades the 4th stage

Improved V-Blast: Effects of Detection Ordering and TPA

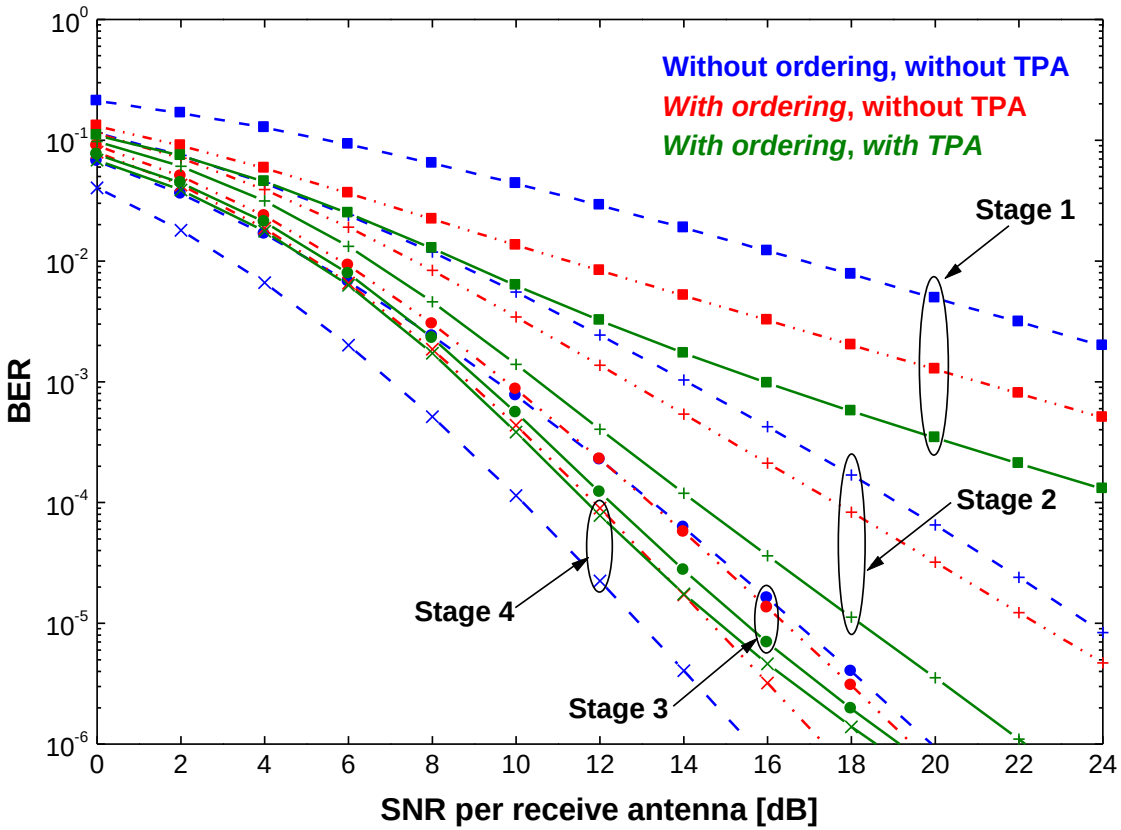

- TPA shifts the BER curves of the 1st and 2nd stages.

Improved V-Blast: Average Power of Optimal TPA

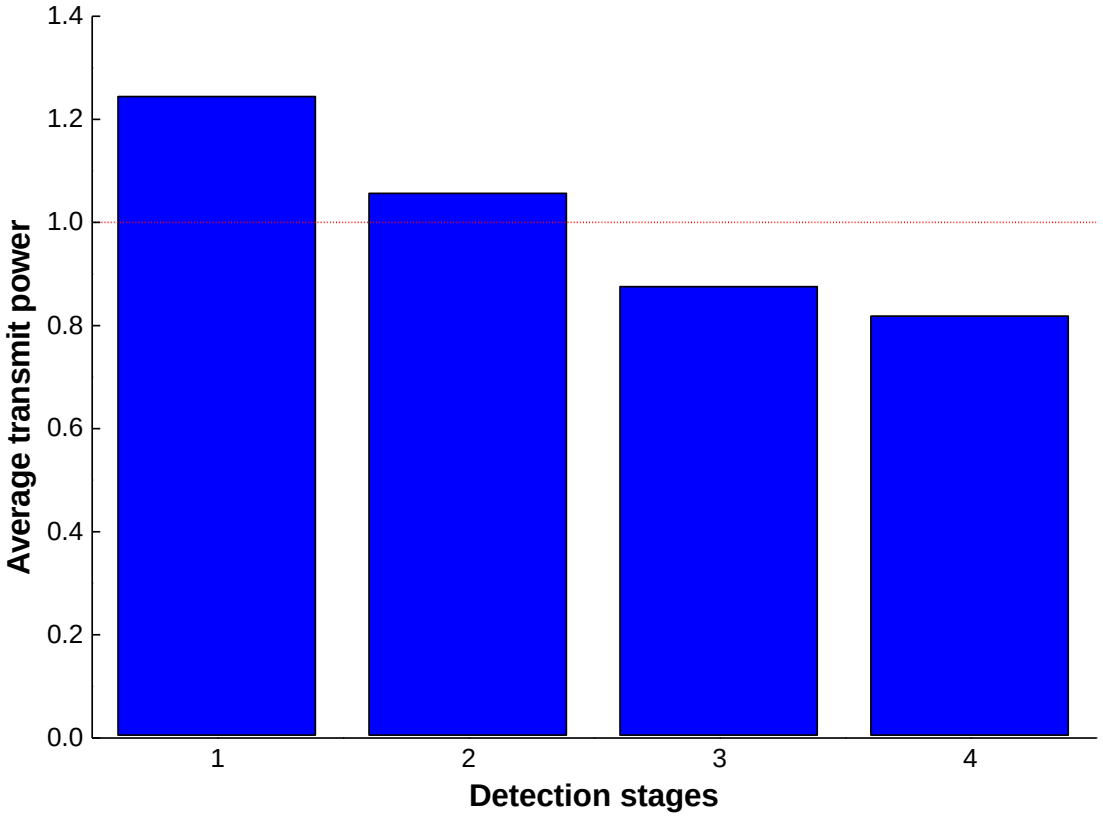

- Assign more transmit power to earlier detection stages
  - ❾ Compensation of low diversity orders at low stages

Improved V-Blast: Tx Power Allocat'n for min BER

- Post-detection SNR for the k_ith Symbol

$$\rho_{k_i} = \frac{P_{k_i}}{\sigma_n^2 \left\| \mathbf{v}_{k_i} \right\|^2}$$

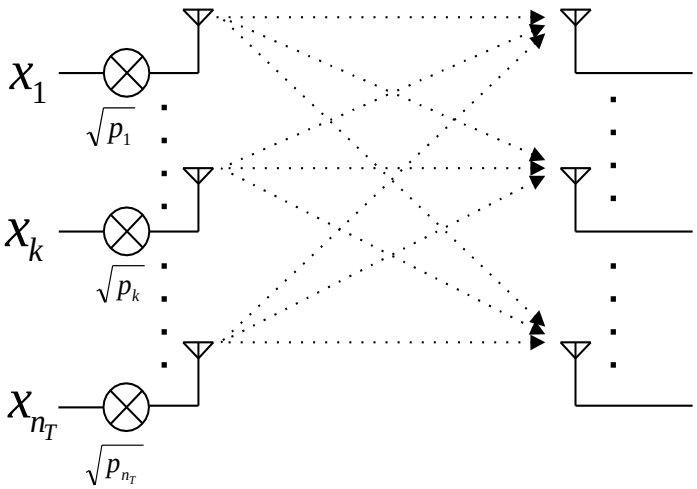

- BER for the k_ith Substream

$$P_b(e_{k_i}) = f(\rho_{k_i})$$

- S. H. Nam and K. B. Lee, "Transmit Power Allocation for an Extended V-BLAST System," IEEE T-Comm, July 2004, pp 1074-1079.

Improved V-Blast: BER

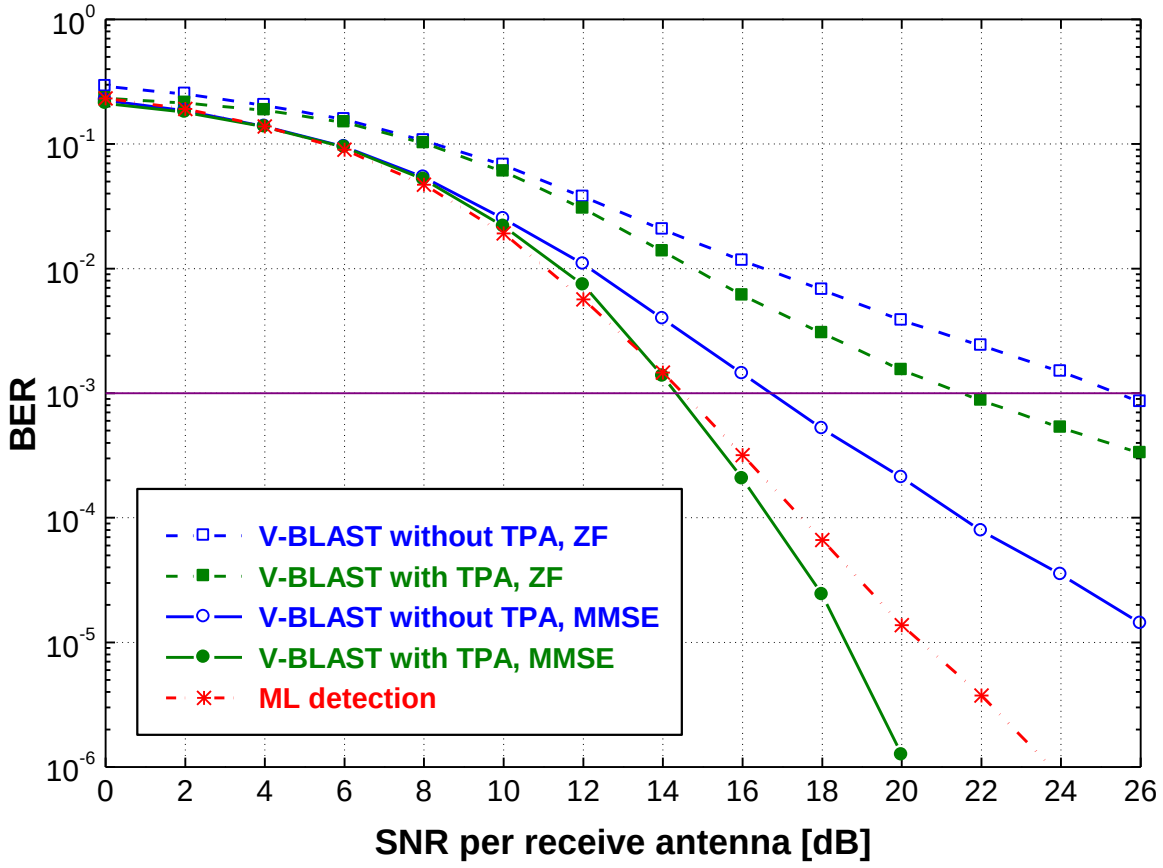

- SNR gain at BER = 10^{-3}: 4 dB (ZF), 2.5 dB (MMSE)

Detection Schemes

- V-Blast
- ML Receiver
- LD (Linear Decorrelator) Receiver
- MMSE Receiver

- ML Receiver

  - Select the most likable transmitted vector.

  - Complexity problem

- LD Receiver

  - Null the interference signal using pseudo-inverse matrix.

$$\mathbf{r} = \left(\mathbf{H}^H \cdot \mathbf{H}\right)^{-1} \cdot \mathbf{H}^H \cdot \mathbf{y}$$
$$= \sqrt{\frac{P}{N}} \cdot \mathbf{x} + \sigma \cdot \left(\mathbf{H}^H \cdot \mathbf{H}\right)^{-1} \cdot \mathbf{H}^H \cdot \mathbf{n}$$

- MMSE Receiver

  - minimize mean squared error due to interference signal and noise.

$$\mathbf{r} = \sqrt{\frac{P}{N}}\mathbf{H}^H \cdot \left(\frac{P}{N}\mathbf{H} \cdot \mathbf{H}^H + \sigma^2 \cdot E\left(\mathbf{n} \cdot \mathbf{n}^H\right) \right)^{-1} \cdot \mathbf{y}$$

- BER Comparison between the Existed Schemes

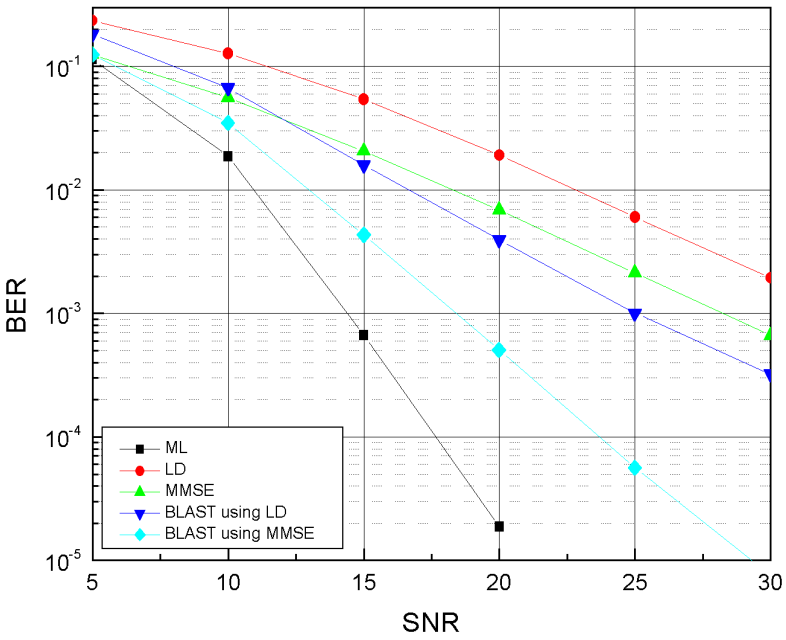

< N=M=4 case >

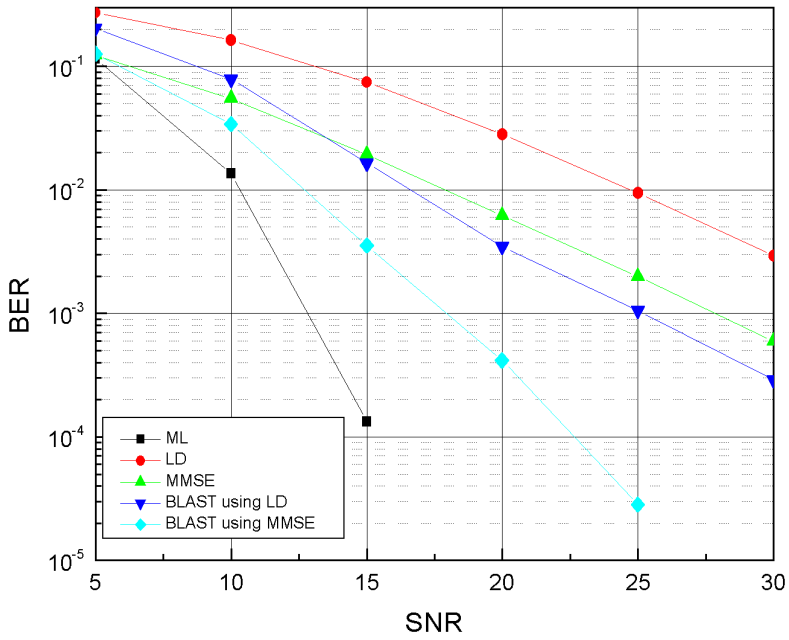

< N=M=6 case >

- V-BLAST receivers outperforms MMSE or LD receivers in terms of BER performance.

- Number of antennas $\Uparrow$

  BER of LD $\Uparrow$

  BER of MMSE …

  BER of V-BLAST and ML $\Downarrow$

- Development of low complexity & high performance receiver is needed.

MIMO Channel Models

- Channel Model

$$\mathbf{H} = \sqrt{\frac{K}{K+1}}\mathbf{H}_{sp} + \sqrt{\frac{1}{K+1}}\mathbf{H}_{sc}$$

$\mathbf{H}_{sp}$: Specular channel component $\left(= a(\theta_r) \cdot a(\theta_t)^T\right)$

$\mathbf{H}_{sc}$: Scattered channel component (i.i.d.)

K = Ricean Factor

MIMO Performance in Correlated Channel

- Environments
- Channel Model
- QPSK Modulation
- SNR per Rx antenna

- Average Capacity

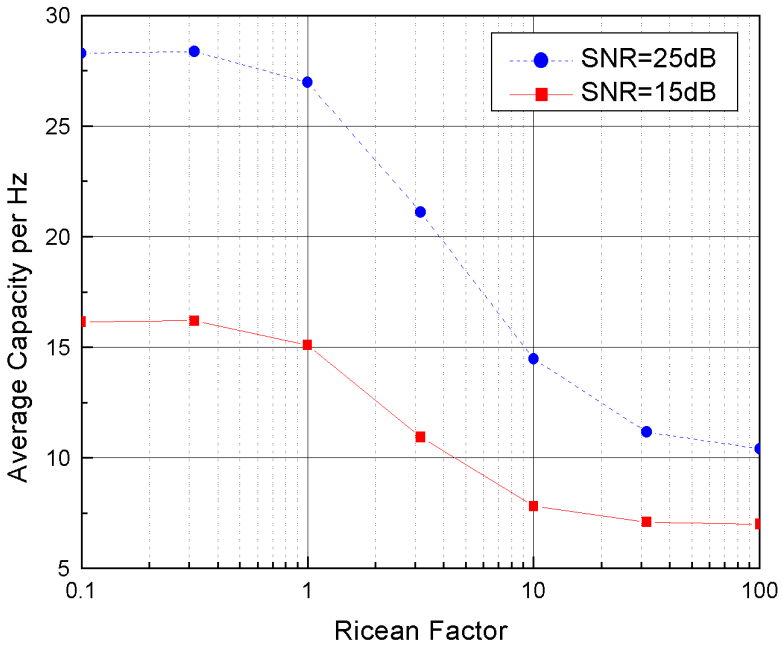

< N=M=4 case >

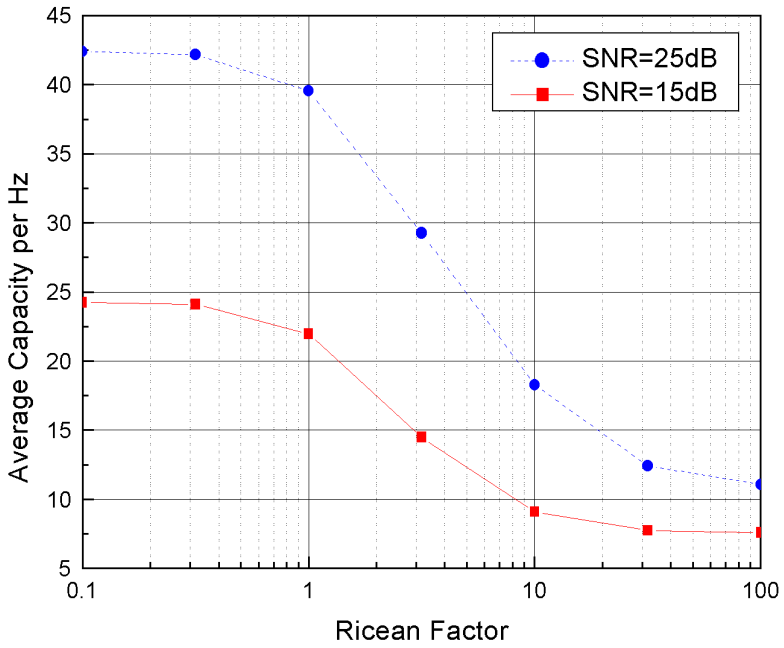

< N=M=6 case >

Blank page

MIMO receiver 구현

ML 설명 (7.5.3 The Optimum Detector, Proakis book)

Posterior probabilities

$$P\left(\text{signal } s_m \text{ was transmitted} \middle| \underline{r}\right), \qquad m = 1, 2, \ldots, M$$

After receiving the $\underline{r}$, the receiver choose s_m that maximizes $p\left(s_m \middle| \underline{r}\right)$

Maximum a posterior probability (MAP)

$$p\left(s_m \middle| \underline{r}\right) = \frac{f\left(\underline{r} \middle| s_m\right) p\left(s_m\right)}{f\left(\underline{r}\right)}$$

$p\left(s_m\right)$: a prior probability of the mth signal.

$$f\left(\underline{r}\right) = \sum_{m=1}^{M} f\left(\underline{r} \middle| s_m\right) p\left(s_m\right)$$

MAP simplification

- M signals are equally probable, $p\left(s_m\right)=\dfrac{1}{M}$.
- $f\left(\underline{r}\right)$: independent of the transmitted signals.
- Choose s_m which maximizes $f\left(\underline{r}\middle|s_m\right)$: ML criterion

  $f\left(\underline{r}\middle|s_m\right)$: likelihood fn.

ML

$$f\left(\underline{r}\middle|s_m\right)=\frac{1}{\left(\pi N_0\right)^{\frac{N}{2}}}\exp\left(-\sum_{k=1}^{N}\left(r_k-s_{mk}\right)^2\Big/N_0\right)$$

$$\left(\text{참조: } f\left(r\middle|s_m\right)=\frac{1}{\sqrt{2\pi\sigma^2}}\mathrm{e}^{-\frac{\left(r_u-s_{m_k}\right)^2}{2\sigma^2}}\right)$$

$$ln\ f\left(\underline{r}\middle|s_m\right)=-\frac{N}{2}ln\left(\pi N_0\right)-\frac{1}{N_0}\sum_{k=1}^{N}\left(r_k-s_{mk}\right)^2$$

Choose s_m which maximizes $f\left(\underline{r}\middle|s_m\right)$

Choose s_m which minimizes $\sum_{k=1}^{N}\left(r_k-s_{mk}\right)^2$

$$D\left(\underline{r}\middle|s_m\right)=\sum_{k=1}^{N}r_k^2-2\sum_{k=1}^{N}r_k s_{mk}+\sum_{k=1}^{N}s_{mk}^2$$

$$=\left\|r\right\|^2-2\underline{r}\cdot\underline{s}_m+\left\|s_m\right\|^2$$

Choose s_m which maximizes $2\underline{r}\cdot\underline{s}_m-\left\|s_m\right\|^2$

R_m : denote the region in the N-dim space for which we decide s_m was transmitted when r is received.

The probability of a decision error given that s_m was transmitted.

$$P\left(e\middle|s_m\right)=\int_{R_m^c}f\left(r\middle|s_m\right)dr$$

Prob. of error

$$P(e) = \sum_{m=1}^{M} \frac{1}{M} P(e|s_m)$$ (M signals are equally probable.)

$$= \sum_{m=1}^{M} \int_{R_m^c} f(r|s_m)\,dr$$

$$= \sum_{m=1}^{M} \frac{1}{M} \left[1 - \int_{R_m} f(r|s_m)\,dr \right]$$

$P(e)$ is minimized by selecting s_m if

$$f(r|s_m) > f(r|s_k) \text{ for } m \neq k.$$

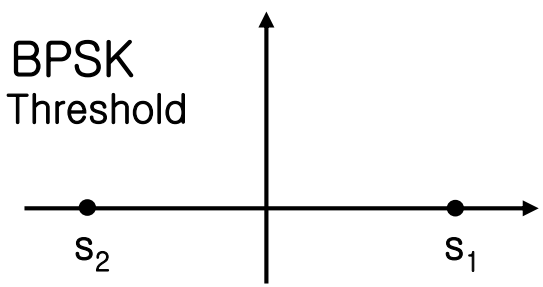

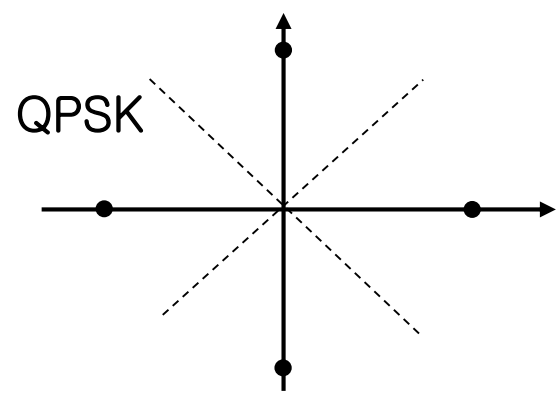

7.6 Probability of Error for Signal Detection in Additive White Gaussian Noise

$$r = s_1 + n = \sqrt{\varepsilon_b} + n$$

$$f\left(r \middle| s_1\right) = \frac{1}{\sqrt{\pi N_0}} e^{-\left(r-\sqrt{\varepsilon_b}\right)^2 / N_0}$$

$$f\left(r \middle| s_2\right) = \frac{1}{\sqrt{\pi N_0}} e^{-\left(r+\sqrt{\varepsilon_b}\right)^2 / N_0}$$

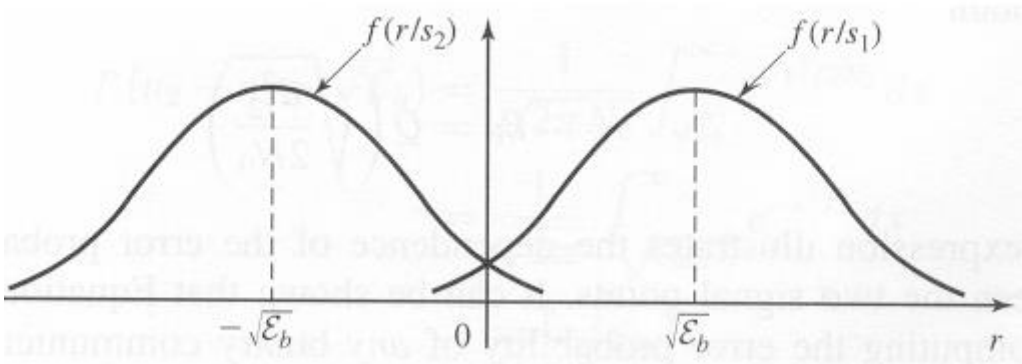

$$
\begin{aligned}
P\left(e\middle|s_1\right) &= \int_{-\infty}^{0} p\left(r\middle|s_1\right) dr \\
&= \frac{1}{\sqrt{\pi N_0}} \int_{-\infty}^{0} e^{-\left(r-\sqrt{\varepsilon_b}\right)^2 / N_0} dr \\
&= \frac{1}{\sqrt{2\pi}} \int_{-\infty}^{-\sqrt{2\varepsilon_b / N_0}} e^{-x^2/2} dx \\
&= \frac{1}{\sqrt{2\pi}} \int_{\sqrt{2\varepsilon_b / N_0}}^{\infty} e^{-x^2/2} dx \\
&= Q\left(\sqrt{\frac{2\varepsilon_b}{N_0}}\right)
\end{aligned}
$$

Simplified Maximum Likelihood Detection Scheme 1

- H. Z. Sung, J. W. Kang, and K. B. Lee, "A Simplified Maximum Likelihood Detection for MIMO Systems," IEICE Transactions on Communications , vol. E98-B, no. 8, pp. 2241-2244, Aug. 2006.

A Simplified ML Detection Scheme

- Conventional ML detection scheme
  - Performs likelihood test with all possible symbol
- Simplified ML detection scheme
  - Step 1 & 2: Chooses candidate symbol combinations among all possible symbol combinations
  - Step 3: Performs likelihood test with candidate symbol combinations

- **Step 1: Select probable symbols for each symbol**

  - Rx signal: r

  - Nulling

$$\mathbf{y} = \left[y_1 \cdots y_n \cdots y_N \right]^T = \mathbf{G} \cdot \mathbf{r}$$

$$\mathbf{G} = \sqrt{\frac{P}{N}} \mathbf{H}^H \cdot \left[\frac{P}{N} \mathbf{H} \cdot \mathbf{H}^H + \sigma^2 \mathbf{I}_M \right]^{-1}$$

$\mathbf{G}$: Nulling Matrix

$\mathbf{y}$: Tentative statistic

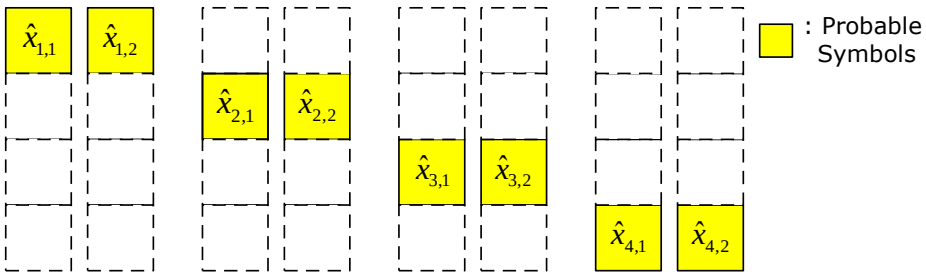

< Example: Probable symbols >

(N=4 and L=2)

  - Tentative decision

The L closest elements of constellation point set to y_n

$$\hat{x}_{n,\ell} = \arg\min_{s \in S}{}_{\ell} \left| y_n - s \right|$$

-> L probable symbols for antenna symbol x_n

- **Step 2: Determine a candidate symbol combination for each probable symbol from step 1**

- Cancellation

$$\mathbf{r}_{n,\ell} = \mathbf{r} - \sqrt{\frac{P}{N}} \cdot \mathbf{h}_n \cdot \hat{x}_{n,\ell}$$

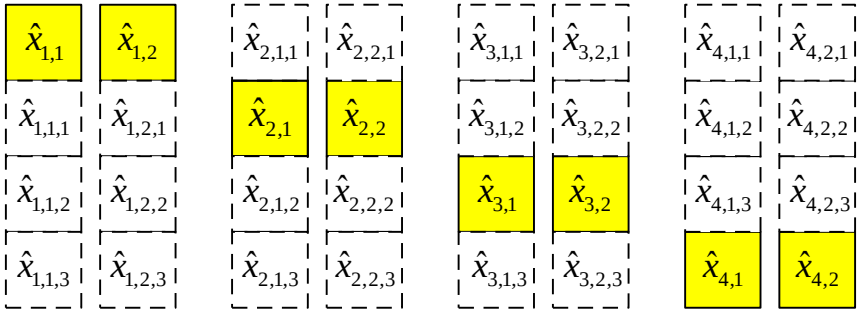

< Example: Candidate symbol combinations >

(N=4 and L=2)

- Nulling

$$\mathbf{y}_{n,\ell} = \left[y_{n,\ell,1} \cdots y_{n,\ell,N-1} \right]^T = \mathbf{G}_n \cdot \mathbf{r}_{n,\ell}$$

where $\mathbf{G}_n = \sqrt{\frac{P}{N}} \mathbf{H}_n^{\ H} \cdot \left[\frac{P}{N} \mathbf{H}_n \cdot \mathbf{H}_n^{\ H} + \sigma^2 \mathbf{I}_M \right]^{-1}$ and $\mathbf{H}_n = \left[\mathbf{h}_1 \cdots \mathbf{h}_{n-1} \ \mathbf{h}_{n+1} \cdots \mathbf{h}_N \right]$

- Slicing & Constructing a candidate symbol combination

$$\hat{x}_{n,\ell,i} = Q(y_{n,\ell,i}) \qquad i = 1,\ 2,\ \cdots,\ N-1$$

$$\hat{\mathbf{x}}_{n,\ell} = [\hat{x}_{n,\ell,1} \quad \hat{x}_{n,\ell,2} \quad \cdots \quad \hat{x}_{n,\ell,n-1} \quad \hat{x}_{n,\ell} \quad \hat{x}_{n,\ell,n} \cdots \quad \hat{x}_{n,\ell,N-1}]^T$$

- **Step 3. Determine the final decision value among candidate symbol combinations**

- The likelihood function

$$p(\mathbf{r}\,|\,\hat{\mathbf{x}}_{n,\ell}) = \frac{1}{\pi^N \cdot \det(\mathbf{I}_N)} \exp\left\{ -(\mathbf{r} - \sqrt{\frac{P}{N}} \cdot \mathbf{H} \cdot \hat{\mathbf{x}}_{n,\ell})^H \cdot (\mathbf{r} - \sqrt{\frac{P}{N}} \cdot \mathbf{H} \cdot \hat{\mathbf{x}}_{n,\ell}) \right\},$$

$$\ell = 1, \ldots, L \text{ and } n = 1, \ldots N$$

- Decision value

$$\hat{\mathbf{x}} = \arg\min_{\hat{\mathbf{x}}_{n,\ell}} \left\| \mathbf{r} - \sqrt{\frac{P}{N}} \cdot \mathbf{H} \cdot \hat{\mathbf{x}}_{n,\ell} \right\|$$

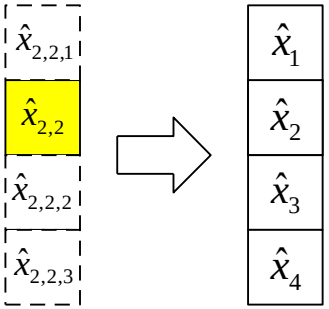

< Example: Decision value >

(N=4 and L=2)

- **BER versus average SNR: N=M=4, QPSK**

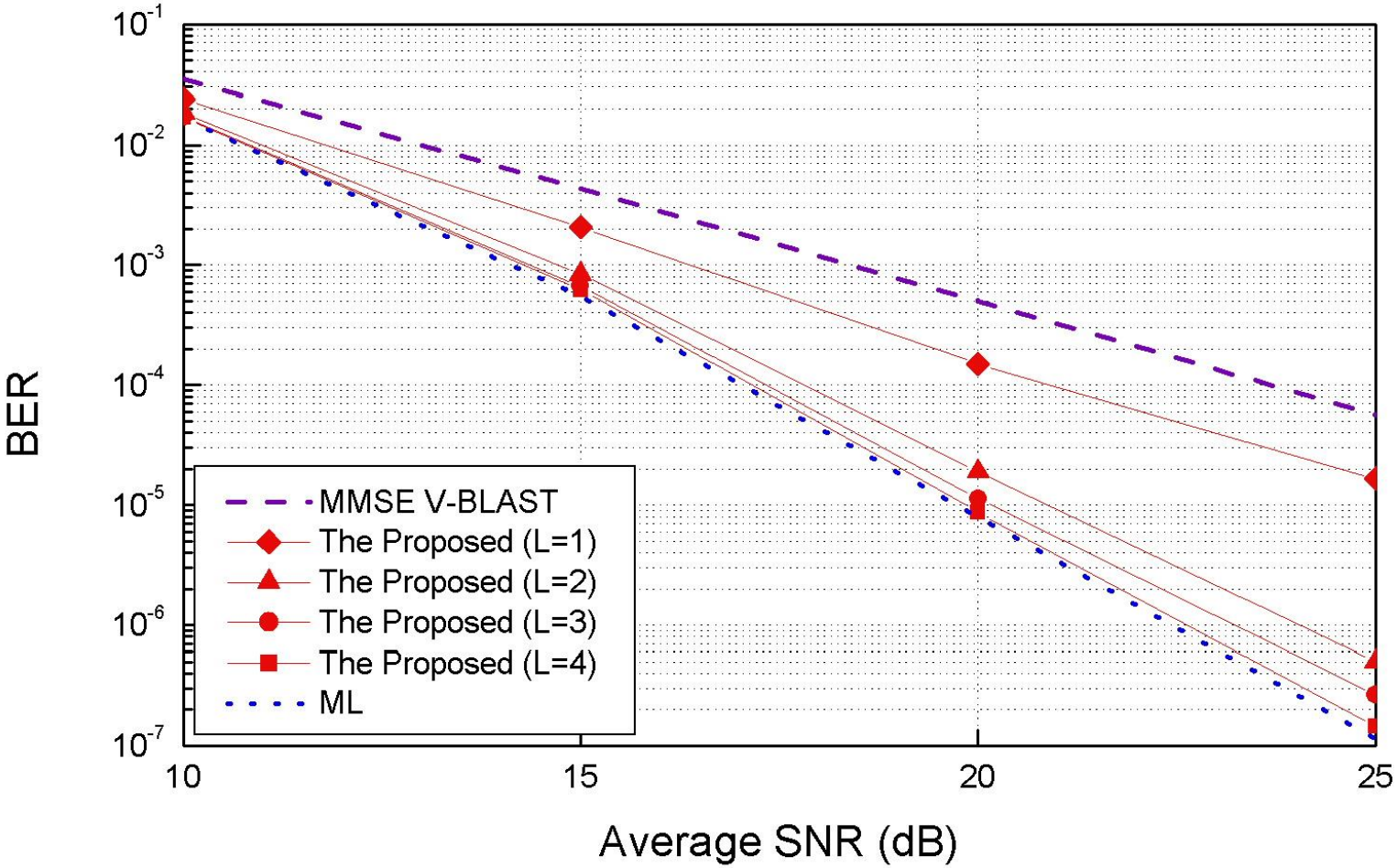

Computational Complexity

- **Example: Number of multiplications of the proposed scheme and conventional detection scheme for QPSK modulation (C=4)**
  - N=M=4, L=4, and QPSK modulation: 72% complexity reduction

	The proposed scheme				V-BLAST	ML
	L=1	L=2	L=3	L=4		
N=M=4	1,008	1,122	1,296	1,440	467	5,120
N=M=6	4,632	5,100	5,568	6,036	1,955	172,032

Simplified Maximum Likelihood Detection Scheme 2

- J. W. Kang and K. B. Lee, "A Multi-stage ML Detection for MIMO Systems," conditionally accepted to *IEICE Transactions on Communications* in May 2005.

< The 1st stage >

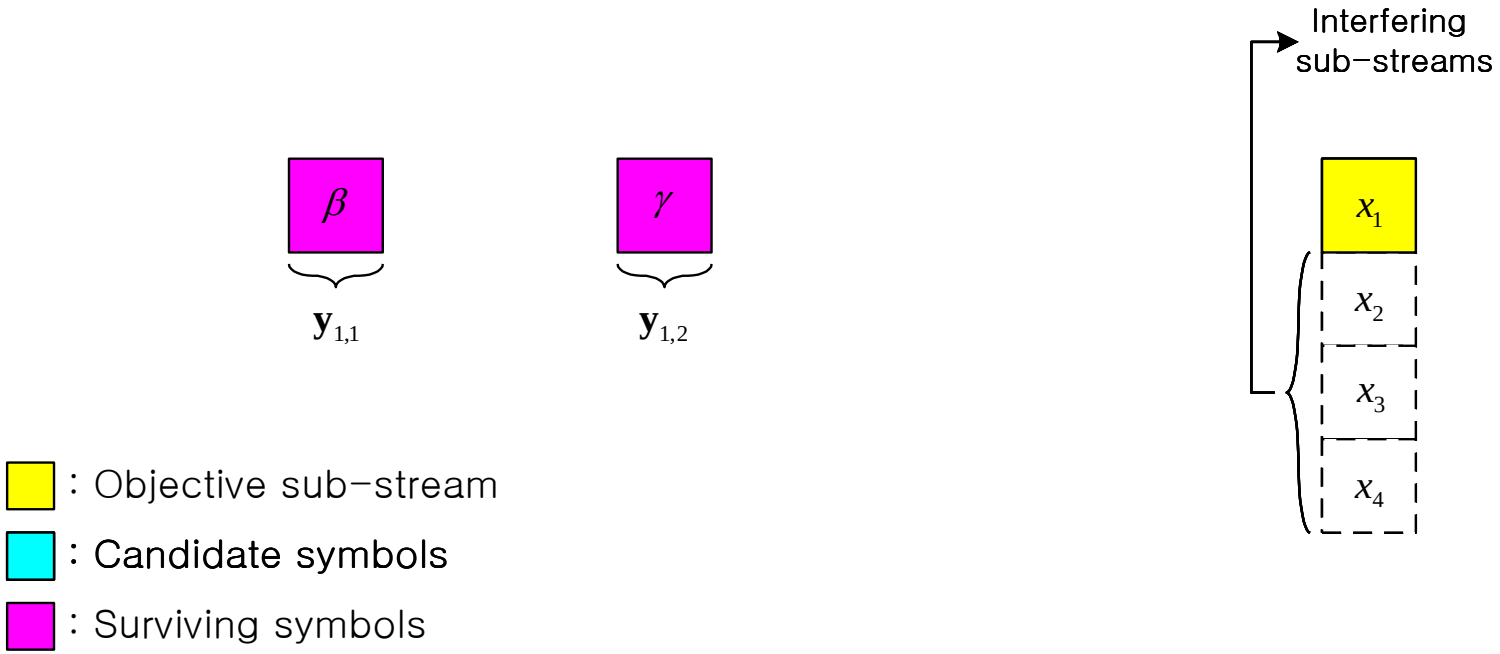

* The number of surviving symbols; L = 2

* C candidate symbols → L surviving symbols

< The 2nd stage >

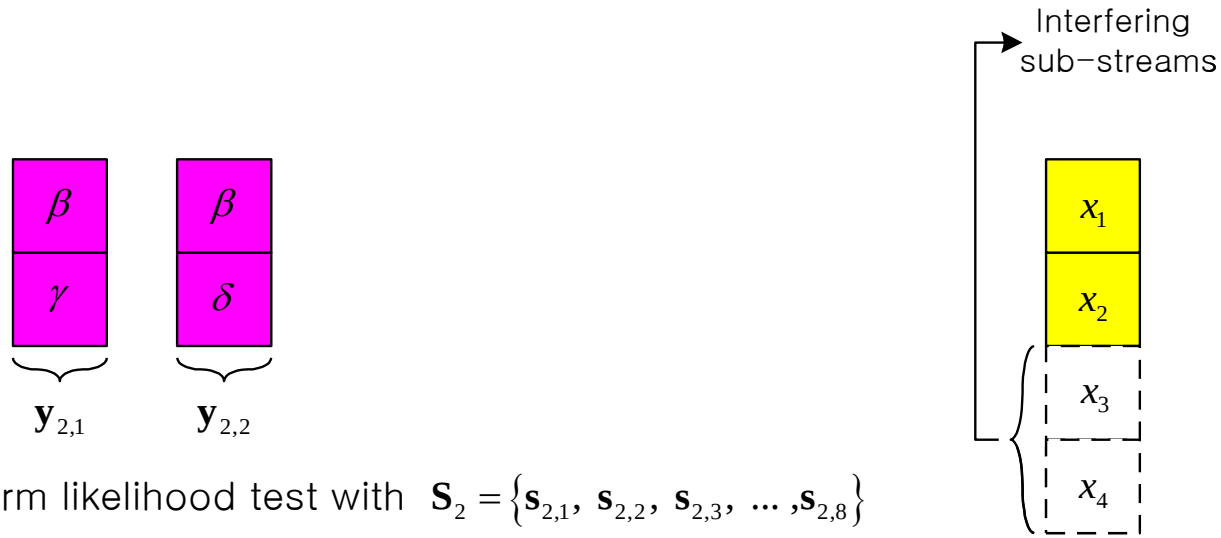

Perform likelihood test with $\mathbf{S}_2 = \{\mathbf{s}_{2,1}, \mathbf{s}_{2,2}, \mathbf{s}_{2,3}, \ldots, \mathbf{s}_{2,8}\}$

* *CL* candidate symbol combinations

→ *L* surviving symbol combinations

- **BER versus average SNR (N=M=4), QPSK**

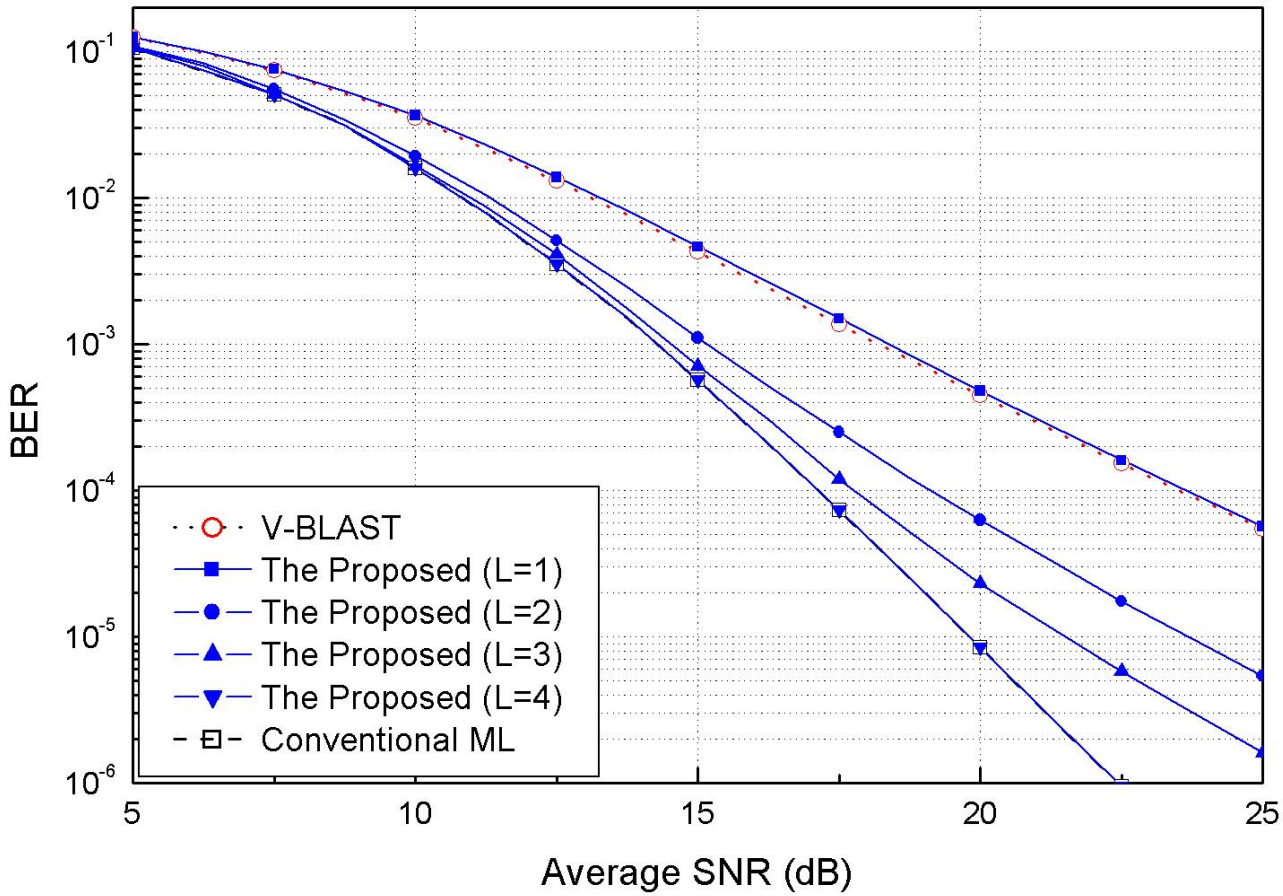

Capacity in band-limited, power-limited gaussian channel

- $$Y_k = X_k + N_k$$
- $$C = I(X_k; Y_k) : X_k \text{ Gaussian, } E[X_k^2] = P$$
- $$C = \frac{1}{2}\log_2(1 + \frac{P}{\sigma^2})$$

MIMO Channel Capacity

- Capacity per Hz

$$C = \log_2 \det\left(\mathbf{I}_M + \frac{P}{\sigma^2 \cdot N} \mathbf{H} \cdot \mathbf{K}_X \cdot \mathbf{H}^H \right) \qquad \mathbf{K}_X = E\left\{ \mathbf{X}\mathbf{X}^H \right\}$$

- Independent data stream, equal power allocation
  - CSI not available in Tx

$$C = \log_2 \det\left(\mathbf{I}_M + \frac{P}{\sigma^2 \cdot N} \mathbf{H}\mathbf{H}^H \right)$$

- At large n and high SNR

$$C > n\log_2\left(\frac{P}{\sigma^2 \cdot e}\right)$$

$\Rightarrow$ Capacity grows linearly with the number of antenna

Water Filling Algorithm in Parallel Channels

- K independent channels in parallel
  - independent Gaussian noise for each channel

$$Y_j = h_j X_j + Z_j, \quad j = 1, 2, \ldots, k$$

$$Z_j \sim N(0, N_j)$$

- Constraint on total transmit power

$$E\sum_{j=1}^{k} X_j^{\,2} \le P$$

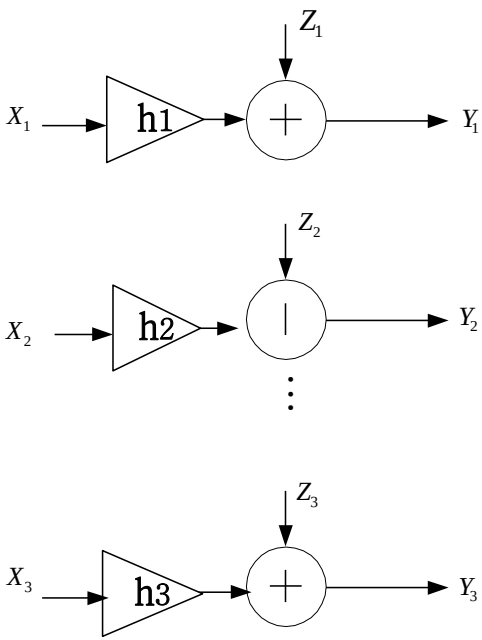

Parallel Gaussian Channel (Cont.)

$$C = \sum_{i=1}^{k} \frac{1}{2} \log(1 + \frac{P_i}{N_i}) \qquad \text{where } \mathrm{P_i} = EX_i^{\,2}, \quad \sum P_i = P$$

- It's achieved when

$$(X_1, X_2, ..., X_k) \sim N\left(0, \begin{bmatrix} P_1 & 0 & \cdots & 0 \\ 0 & P_2 & \cdots & 0 \\ \vdots & \vdots & \ddots & \vdots \\ 0 & 0 & \cdots & P_k \end{bmatrix}\right)$$

- Maximize capacity using Lagrange multipliers

$$J(P_1, P_2, ..., P_k) = \sum \frac{1}{2} \log(1 + \frac{P_i}{N_i}) + \lambda(\sum P_i - P)$$

- Differentiating with respect to P_i

Parallel Gaussian Channel (Cont.)

$$\frac{1}{2}\frac{1}{P_i + N_i} + \lambda = 0$$

$$P_i = -\frac{1}{2\lambda} - N_i$$

$$P_i = \nu - N_i, \qquad \left(\nu = -\frac{1}{2\lambda}\right)$$

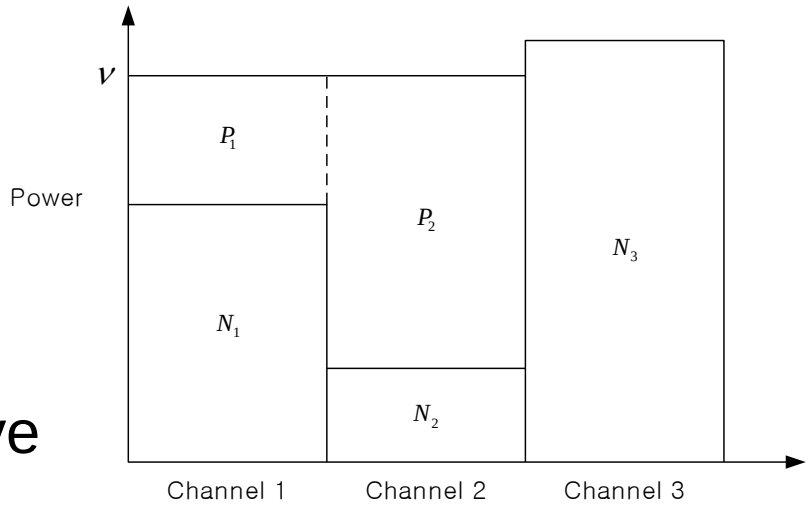

- Power must be non-negative

$$P_i = (\nu - N_i)^+$$

$$\sum (\nu - N_i)^+ = P$$

Water Filling & SVD for max capacity
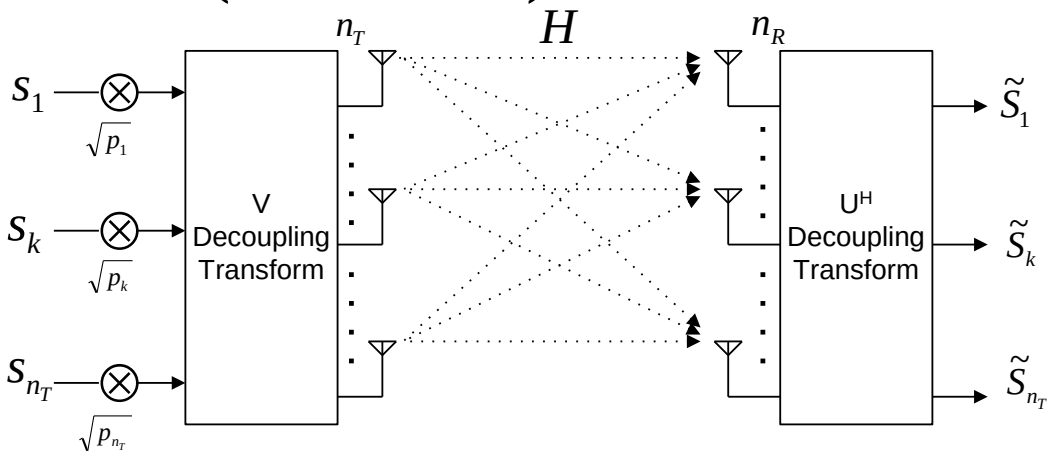
- By decoupling transformation, MIMO channel is transformed into parallel SISO channel
- $H = UDV^H, \mathrm{D}^2$: eigenvalues of HH^{H}
- $\mathbf{Y} = U^H(HV\mathbf{X} + \mathbf{N}) \rightarrow \mathbf{Y} = D\mathbf{X} + U^H\mathbf{N}$