Aircraft Structural Analysis

Chapter 5

Load Transfer in Stiffened Panel Structures

5.1 INTRODUCTION

Point loads acting on idealized wing and fuselage structures cannot be applied directly to the shear panels, which are capable of supporting only pure shear exerted in their plane, along and in the direction of their boundaries. In section 2.5, we studied planar assemblies of rods and shear webs. In that type of structure, the rods act as stiffeners to which direct loads are applied and by means of which the loads are diffused to the shear panels. For wing and fuselage structure, the analogous stiffening members are the rib and frame, respectively.

5.1 INTRODUCTION

Cantilevered thin-walled cylinder with point load P

The load P can not be applied directly to the fragile skin, so a "hard point" must be provided.

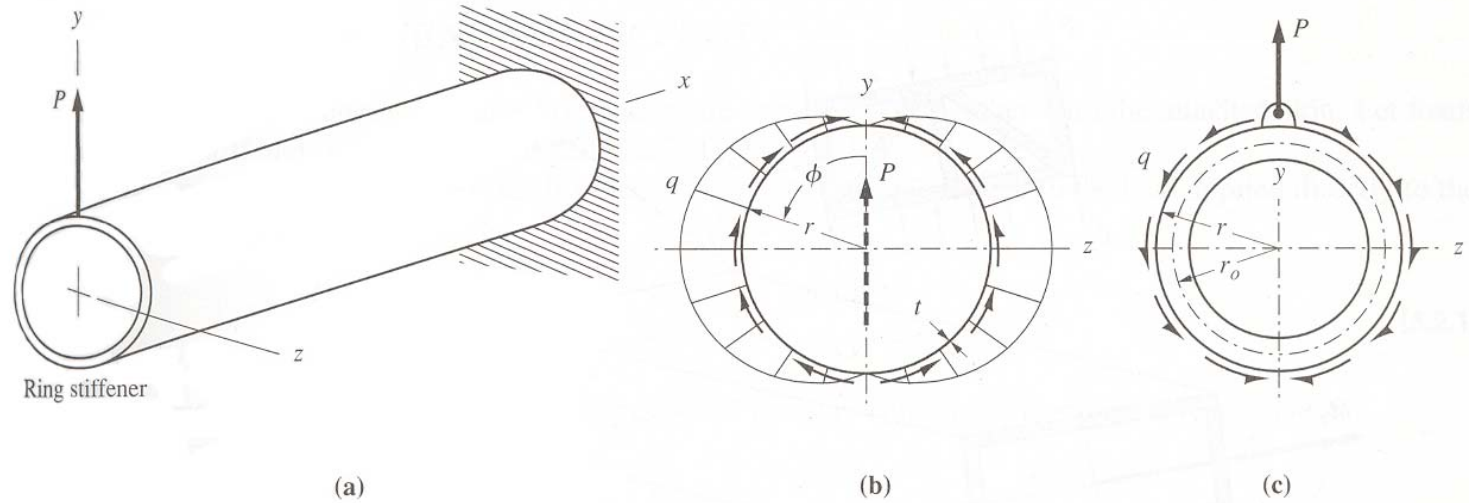

Figure 5.1.1 (a) Thin-walled cylinder with a point load applied to a ring stiffener. (b) Shear flow applied to the skin by the stiffener. (c) Free-body diagram of the stiffener, with the shear flow applied by the skin in equilibrium with the load *P* applied at the lug.

The formula for shear flow distribution is,

$$q = \frac{P}{\pi r} \sin \phi$$

5.1 INTRODUCTION

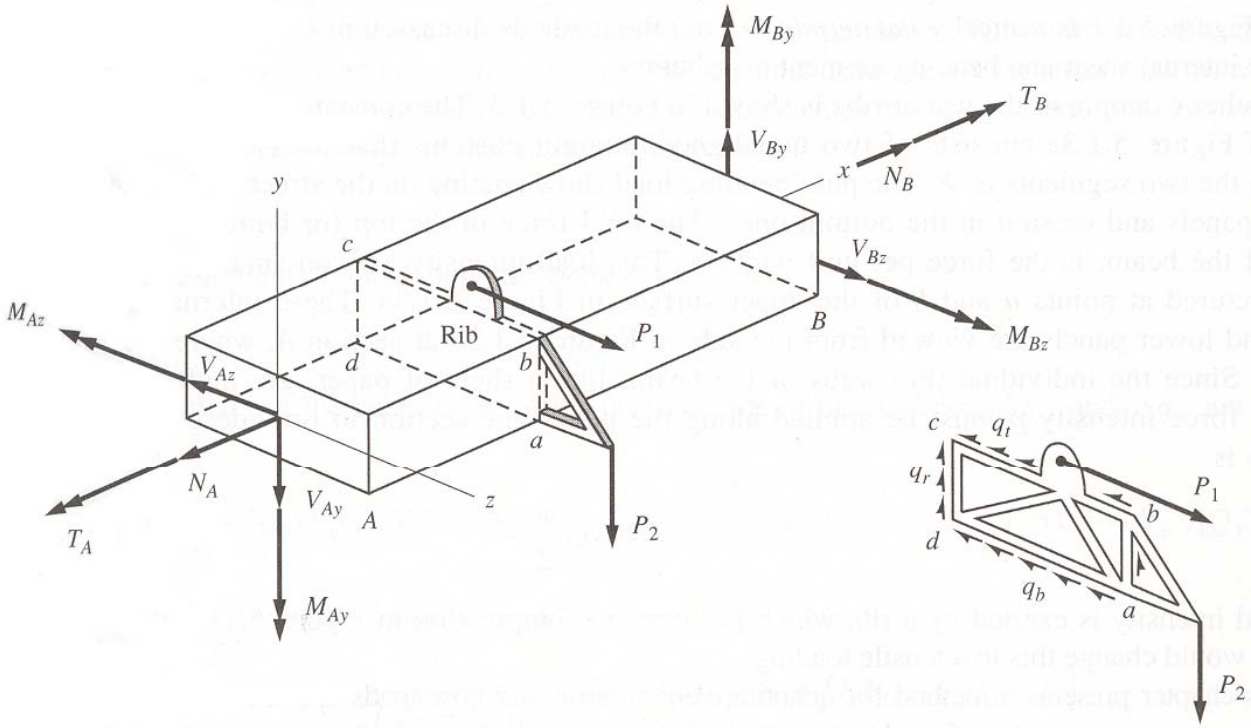

Figure 5.1.2 Concentrated forces applied to the rib of a thin-walled box beam between stations *A* and *B*.

5.1 INTRODUCTION

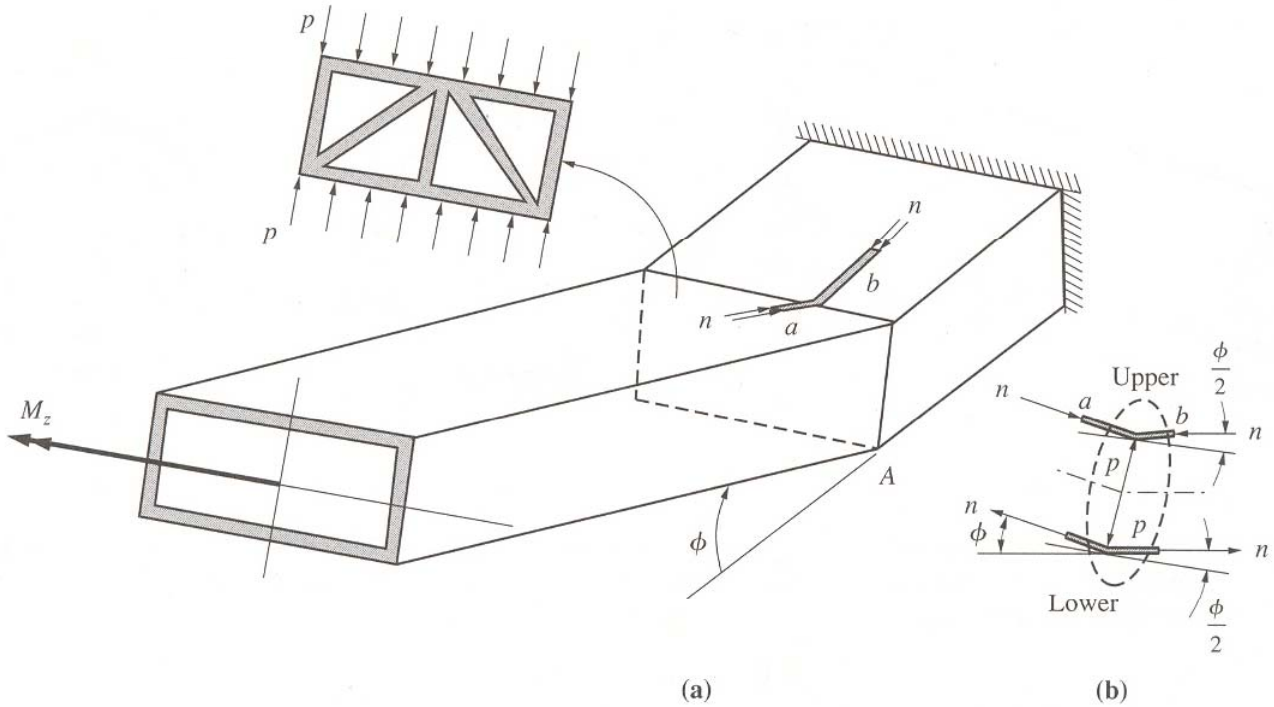

Figure 5.1.3 (a) Pure bending of a thin-walled box beam with a junction at section *A*. (b) At *A*, the membrane forces per unit length *n* in the upper and lower walls must be reacted to by the rib force *p*.

Force intensity $$p = 2n \sin \frac{\phi}{2}$$

5.2 RIB AND BULKHEAD SHEAR FLOW

Consider a transverse shear (a rib or a fuselage frame or bulkhead) together with the attached skin. Let loads be applied to the stiffener, in its plane, as illustrated in Figure 5.2.1

The difference in the section shear loads on each side of the stiffener is due to the load applied directly to the stiffener

$$P_y = V_y^+ - V_y^- = \Delta V_y$$
$$P_z = V_z^+ - V_z^- = \Delta V_z$$

The subscript '−' and '+' represent the positions just fore and aft of the stiffener, respectively

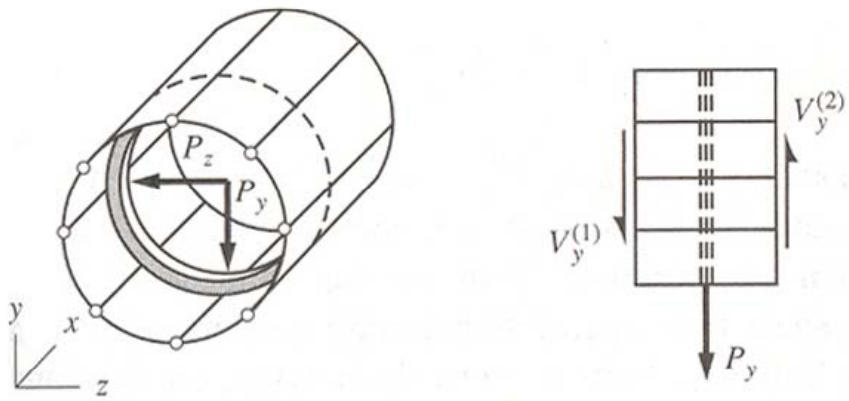

Figure 5.2.1 Loads applied to a fuselage frame, and the shear force resultants in the adjacent skin.

5.2 RIB AND BULKHEAD SHEAR FLOW

Difference between the shear flows fore and aft of the stiffener

The shear flow $\tilde{q}$ which acts at on the skin along the stiffener–skin interface, where the skin is bonded to the frame

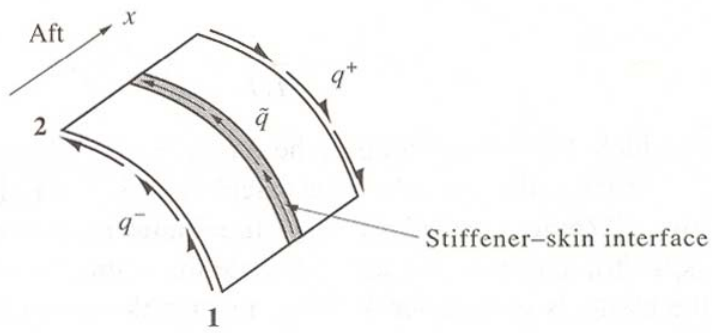

Figure 5.2.2 Shear flows immediately fore and aft of a stiffener and along the bond line.

$$\tilde{q} = q^+ - q^- \qquad \Delta\tilde{q} = \Delta q^+ - \Delta q^-$$

Δq^+ and Δq^- are obtained from Eq 4.7.3

$$\Delta\tilde{q} = \frac{1}{(I_y I_z - I_{yz}^2)}\{[I_y(V_y^+ - V_y^-) - I_{yz}(V_z^+ - V_z^-)]Q_z + [I_z(V_z^+ - V_z^-) - I_{yz}(V_y^+ - V_y^-)]Q_y\}$$

$$\Delta\tilde{q} = \tilde{q}_2 - \tilde{q}_1 = \frac{1}{(I_y I_z - I_{yz}^2)}\left[(I_y P_y - I_{yz} P_z)\, Q_z + (I_z P_z - I_{yz} P_y)\, Q_y\right]$$

5.2 RIB AND BULKHEAD SHEAR FLOW

For idealized beams, for which, in walls joining longitudinal stiffeners, the shear flow is constant, Eq 4.8.2 and Eq 4.8.3 –for computing section shear flows–take the following form for calculating the bond line shear flow:

$$P_x'^{(f)} = \frac{1}{I_y I_z - I_{yz}^2}\left[(I_y V_y - I_{yz} V_z) y_f + (I_z V_z - I_{yz} V_y) z_f\right] A_f \qquad \text{Eq. 4.8.2}$$

$$P_x'^{(f)} = \sum_{i=1}^{\text{No. of webs}} q^{(i)} \qquad \text{Eq. 4.8.3}$$

$$\sum_{i=1}^{\text{No. of webs}} \tilde{q}^{(i)} = \tilde{P}_x'^{(f)}$$

where

$$\tilde{P}_x'^{(f)} = \frac{1}{I_y I_z - I_{yz}^2}\left[\left(I_y P_y - I_{yz} P_z\right) y_f + \left(I_z P_z - I_{yz} P_y\right) z_f\right] A_f$$

–> The jump in the frange load gradient across a stiffener

$$\widetilde{P}_x'^{(f)} = (\widetilde{P}_x'^{(f)})^+ - (\widetilde{P}_x'^{(f)})^-$$

5.2 RIB AND BULKHEAD SHEAR FLOW

The procedure for calculating the shear flow around a transverse stiffener.

- Remove the frame from the skin-stringer structure.
- Transfer the frame loads to the skin-stringer structure,
- Calculate statically equivalent shear flow distribution around the periphery.
- Reverse the computed shear flow directions to show them acting on the frame.

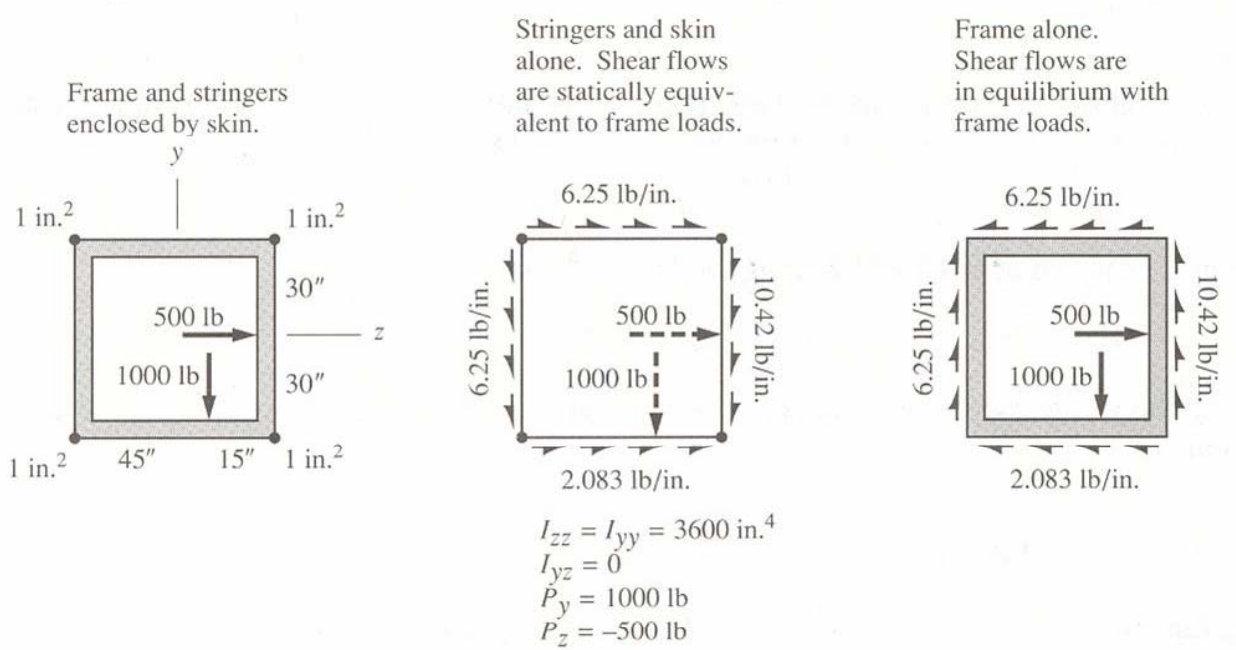

Figure 5.2.3 Example of a frame-to-skin load transfer calculation.

5.2 RIB AND BULKHEAD SHEAR FLOW

Example 5.2.1

Verify Equation 5.1.1 for the ring stiffener in Figure 5.1.1 There are no longitudinal stiffeners; the skin is effective in both shear and bending. Assume the thickness t of the skin is very small compared to the radius r.

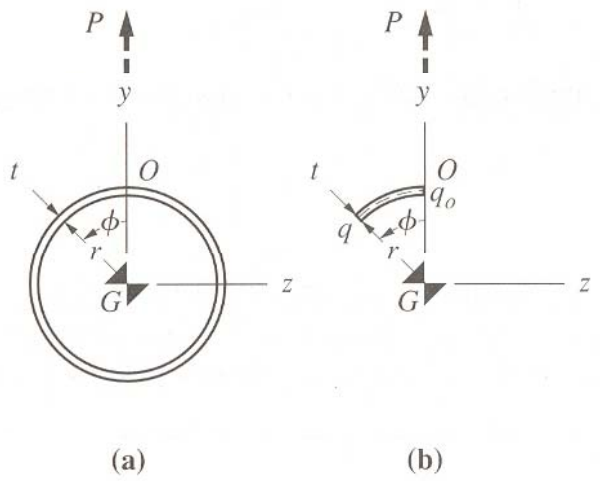

Figure 5.2.4 (a) Cross section of the skin of the cylinder in Figure 5.1.1. (b) An arc of the cross section.

5.2 RIB AND BULKHEAD SHEAR FLOW

The area moment of inertia about the z axis is,

$$I_z = \iint_A y^2 dA = \int_0^{2\pi} (r\cos\phi)^2 (t r d\phi) = \pi r^3 t \qquad [a]$$

By symmetry, $I_y = I_z$, $I_{yz} = 0$

$$P_y = -P \ , \ P_z = 0$$

Thus, $$\Delta\tilde{q} = \frac{P_y Q_z}{I_z} = -\frac{P}{\pi r^3 t} Q_z \qquad [b]$$

The moment of the area of an arc of the circle, starting at O and subtended by the angle Φ, is

$$Q_z = \iint_A y dA = \int_0^{\phi} (r\cos\phi')(t r d\phi') = r^2 t \sin\phi \qquad [c]$$

5.2 RIB AND BULKHEAD SHEAR FLOW

Substituting Eq [c] into [b],

$$\tilde{q} = \tilde{q}_o - \frac{P}{\pi r}\sin\phi \qquad [d]$$

The resultant moment of this shear flow about G is zero

$$\int_0^{2\pi} r \times (\tilde{q} r\, d\phi) = 0$$

$$r^2 \int_0^{2\pi} \left(\tilde{q}_o - \frac{P}{\pi r}\sin\phi\right) d\phi = 2\pi r^2 \tilde{q}_o = 0$$

$\tilde{q}_o = 0$, so that eq [d] becomes

$$\tilde{q} = -\frac{P}{\pi r}\sin\phi$$

5.2 RIB AND BULKHEAD SHEAR FLOW

Consider the more complex situation illustrated in Figure 5.2.5 in which there are five stiffeners, A through E. The stiffener at D is loaded precisely as the one in Figure 5.1.1, so its peripheral shear flow distribution will be identical. By the same token, in spite of the fact that loads are applied to the structure on either side of the stiffener at C, since C itself has no concentrated load, the shear flow around its perimeter is zero.

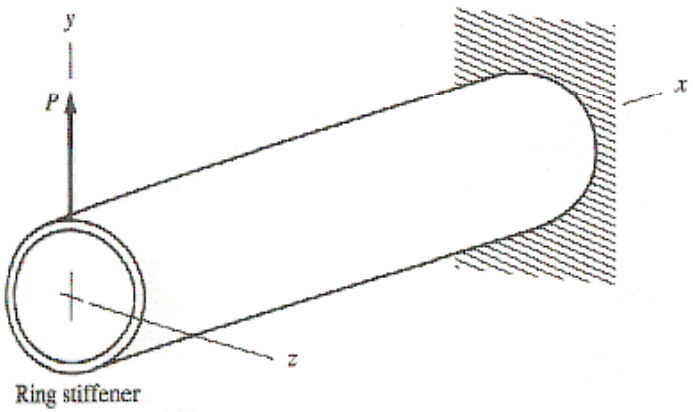

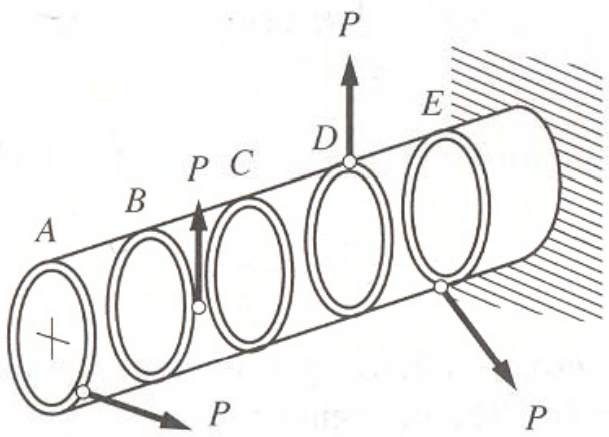

Figure 5.2.5 Stiffened cylinder with several concentrated loads.

5.2 RIB AND BULKHEAD SHEAR FLOW

Example 5.2.2

Consider the cantilever box beam of square cross section illustrated in Figure 5.2.6. Point loads are applied to the frames at sections A,B,C, and D, as shown. Calculate (a) the panel shear flows in each of the two bays adjacent to section C, and (b) the shear flow around the perimeter of frame C

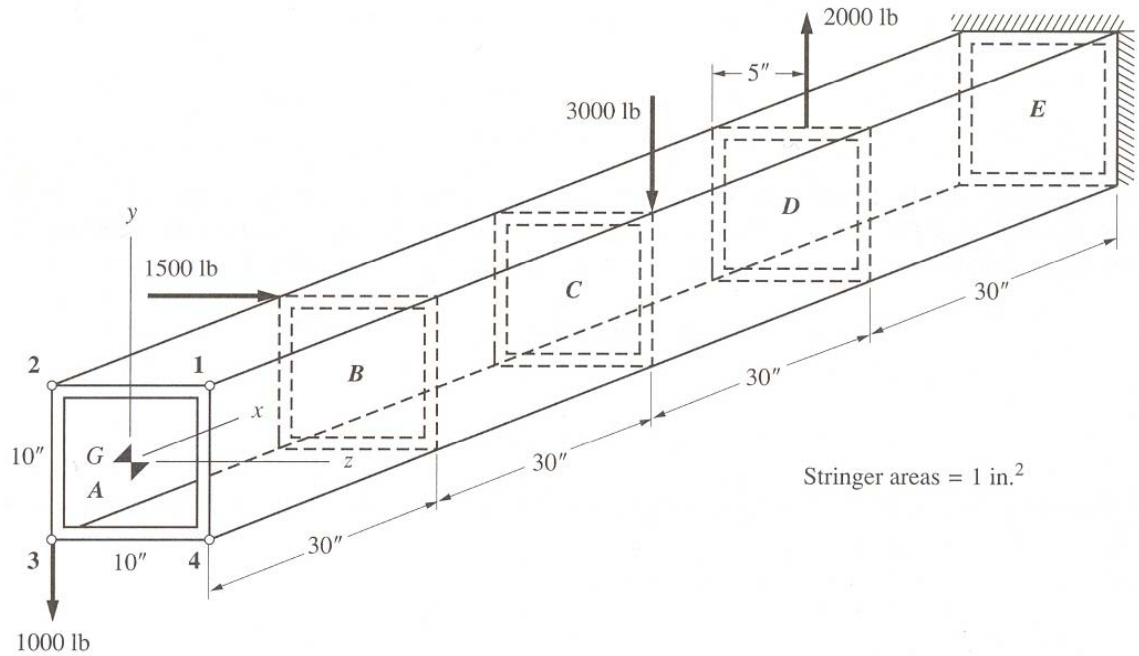

Figure 5.2.6 Cantilever box beam subjected to transverse point loads.

5.2 RIB AND BULKHEAD SHEAR FLOW

(a)

$$I_y = I_z = 4[5^2(1)] = 100 \text{ in.}^4$$

$$P_x'^{(f)} = \left(\frac{V_y y}{I_z} + \frac{V_z z}{I_y}\right) A_f = 0.01(V_y y + V_z z) \qquad [a]$$

Between section B and C

$$V_y = 1000 \text{ lb} \qquad V_z = -1500 \text{ lb}$$

$$\sum q_{out} = \sum q_{in} + P_x'^{(f)} \qquad [b]$$

$$2 \times 50 \times (q_o + 125) + 2 \times 50 \times q_o = 0$$

$$q_o = -62.5 \text{ lb/in.} \qquad [C]$$

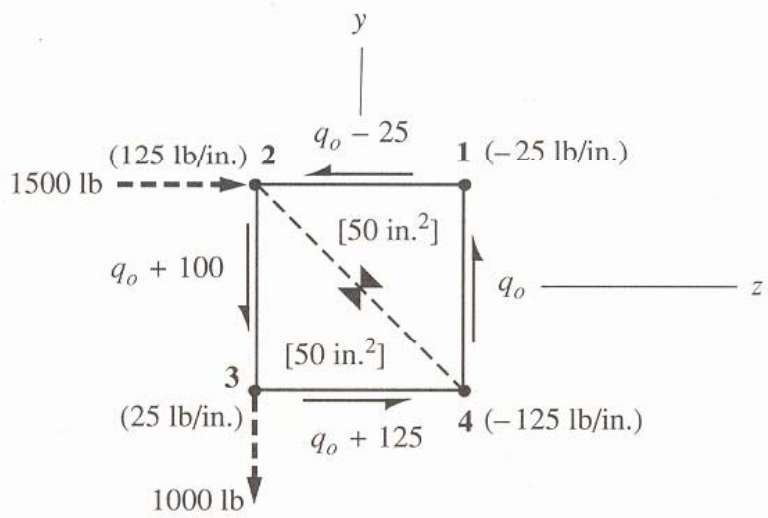

5.2 RIB AND BULKHEAD SHEAR FLOW

Between C and D

$V_y = 1000\ \text{lb} + 3000\ \text{lb} = 4000\ \text{lb}$ $\quad V_z = -1500\ \text{lb}$

$$2 \times 50 \times (q_o + 275) + 2 \times 50 \times q_o = -(10 \times 3000)$$

$$q_o = -287.5\ \text{lb/in} \qquad [d]$$

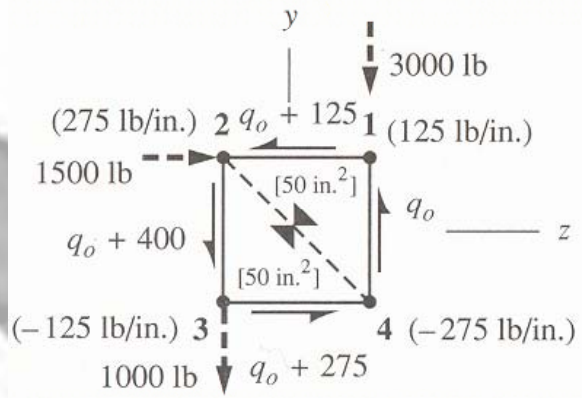

Substituting equations [c] and [d],

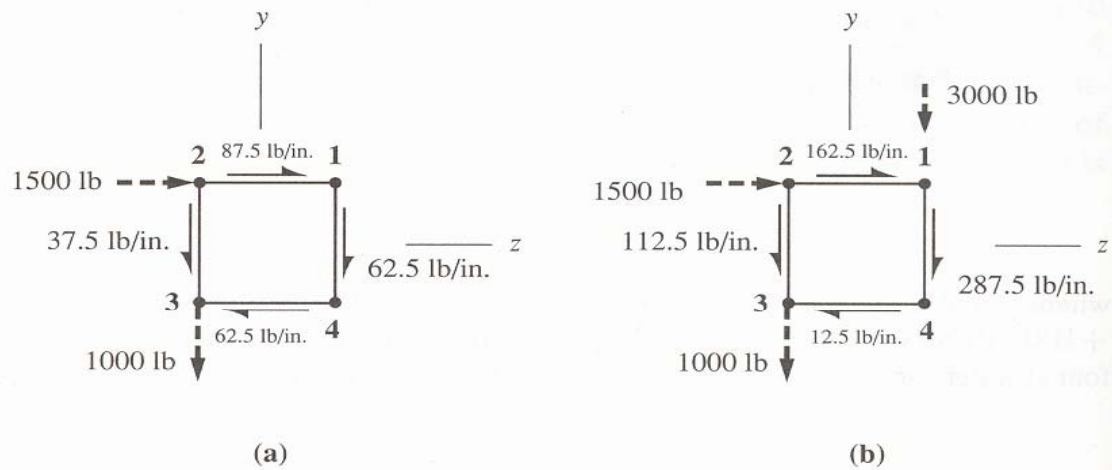

Figure 5.2.9 (a) Shear flows in the bay immediately ahead of section C.
(b) Shear flows in the bay immediately aft of section C.

5.2 RIB AND BULKHEAD SHEAR FLOW

(b)

$P_z = 0 \qquad P_y = +3000 \text{ lb}$

$$\tilde{P}_x'^{(f)} = \frac{P_y y}{I_z} A_f = \frac{3000y}{100}(1) = 30y$$

$$2 \times 50 \times (\tilde{q}_o + 150) + 2 \times 50 \times \tilde{q}_o = -(10 \times 3000)$$

$$\tilde{q}_o = -225 \text{ lb/in.}$$

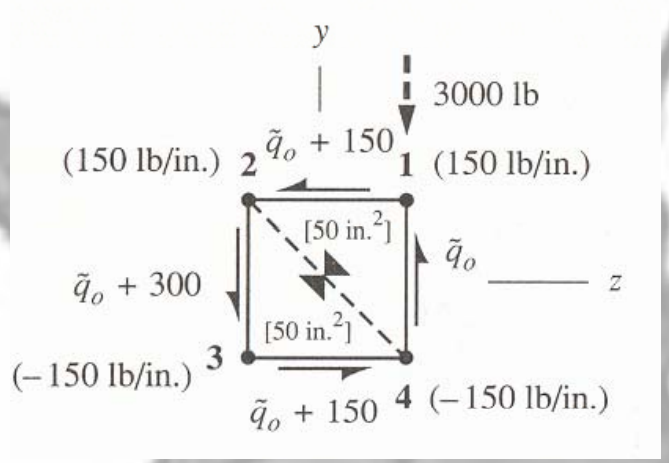

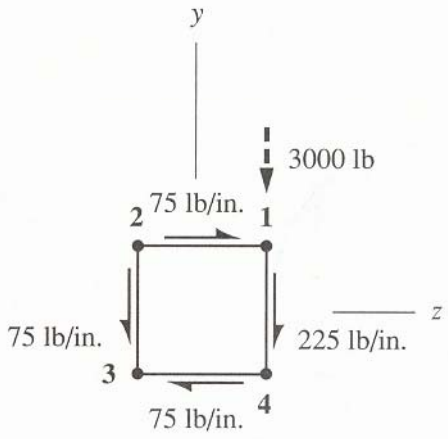

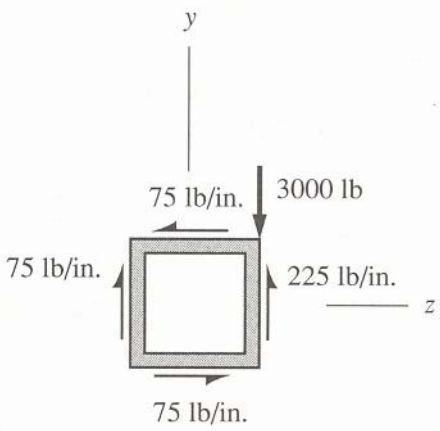

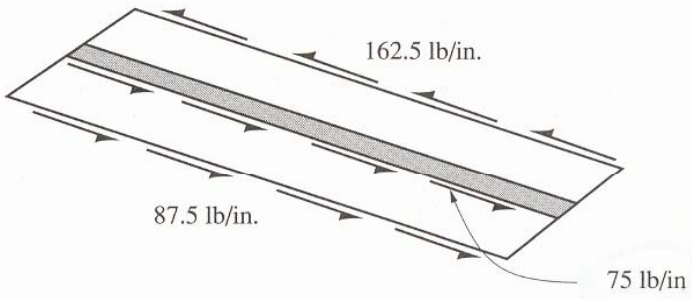

5.2 RIB AND BULKHEAD SHEAR FLOW

Example 5.2.3

Figure 5.2.13 shows a 100 in. diameter circular fuselage frame with a 1000lb Vertical load applied to the floor beam. The 24 equally spaced stringers all have the same 0.2 in. area. Calculate the shear flow distri-bution around the frame.

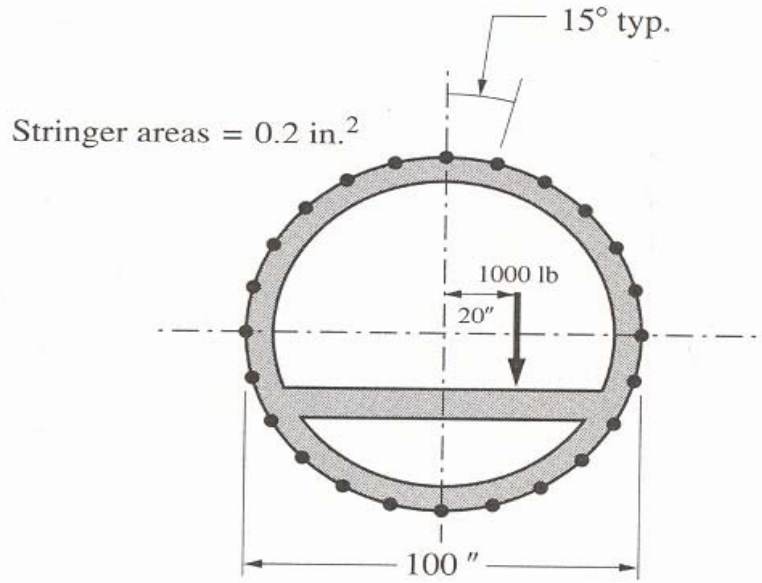

Figure 5.2.13 Circular fuselage frame with a load applied to the floor beam.

5.2 RIB AND BULKHEAD SHEAR FLOW

Remove the frame and numbering the stringers.

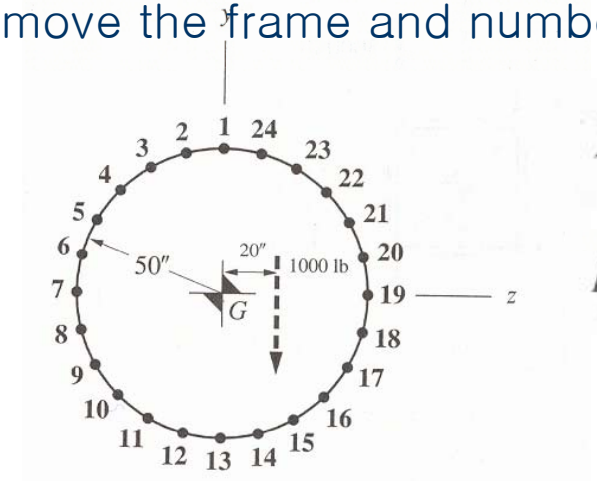

$$I_z = \sum_{i=1}^{24} y_i^2 A_i = A_f \sum_{i=1}^{24} y_i^2$$

$$I_z = A_f[2y_1^2 + 4(y_2^2 + y_3^2 + y_4^2 + y_5^2 + y_6^2)]$$

$$= 6000 \text{ in.}^4$$

$$\tilde{P}_x'^{(i)} = \frac{P_y y_i}{I_z} A_i = 0.03333 y_i$$

Since the moment of the shear flows equals the moment of the vertical 1000lb load,

$$2Aq_o + 2\left(\frac{A}{24}\right)[2(1.667 + 3.277 + 4.720 + 5.898 + 6.731 + 7.163)]$$

$$-2\left(\frac{A}{24}\right)[2(1.610 + 3.053 + 4.231 + 5.064 + 5.496)] = -(20 \times 1000)$$

$$q_o = -2.107 \text{ lb/in.}$$

5.2 RIB AND BULKHEAD SHEAR FLOW

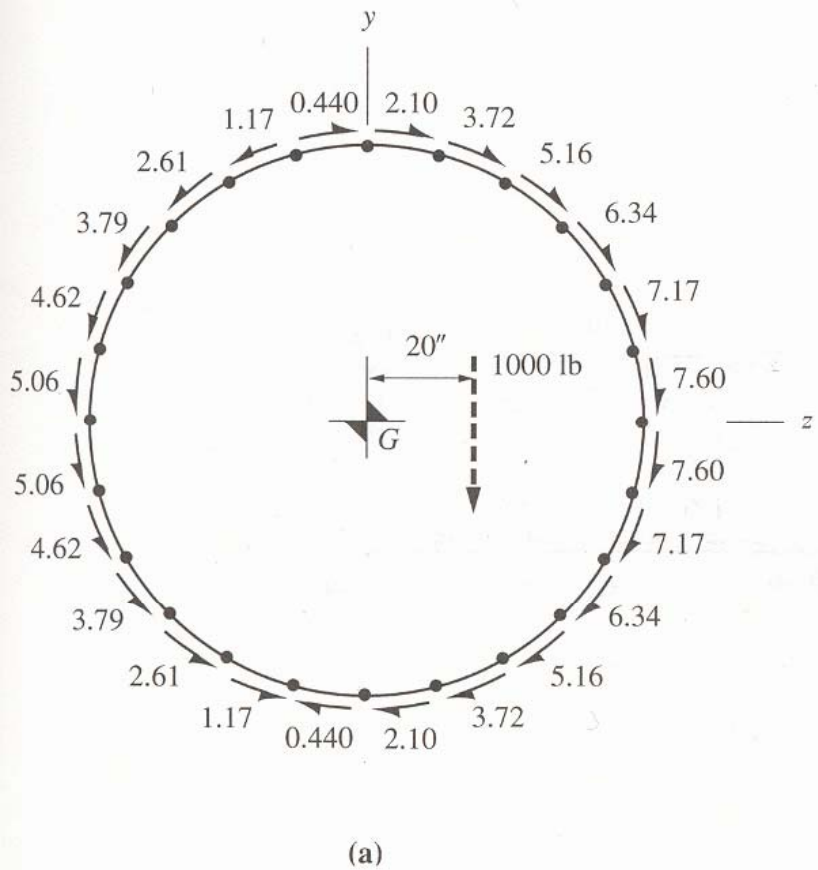

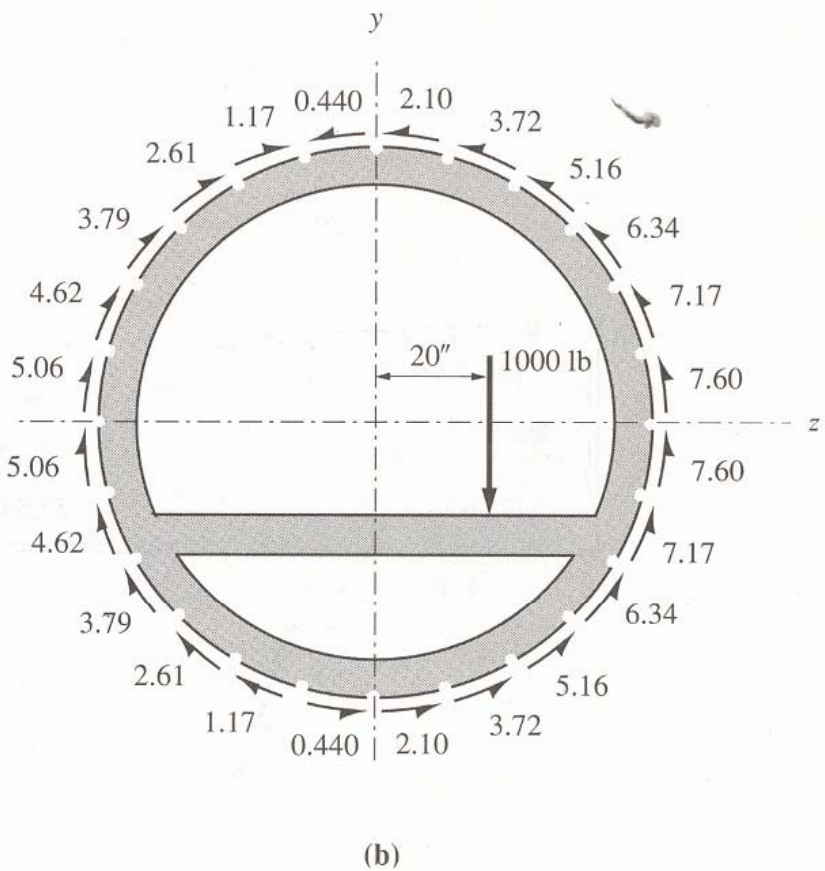

Shear flows exerted by the frame on the skin

Shear flows exerted by the skin on the frame

5.2 RIB AND BULKHEAD SHEAR FLOW

Example 5.2.4

A concentrated load of 5000lb is applied to the wing rib in Figure 5.2.17 at the point where the left most vertical stiffener ef joins the bottom rib flange. The area of the front and rear spar caps (6,7,1, and 12) is 0.3 in. . and the area of the eight numbered stringers is 0.1 in. Calculate the average shear flow in each of the four rib webs and the axial loads in the rib flanges at the location just to the right of the vertical stiffeners ef, cd, and ab. (The rib is bonded to the front and rear spar webs and to the wing skin along the rib flanges, whereas the spanwise stringers are bonded to the wing skin.)

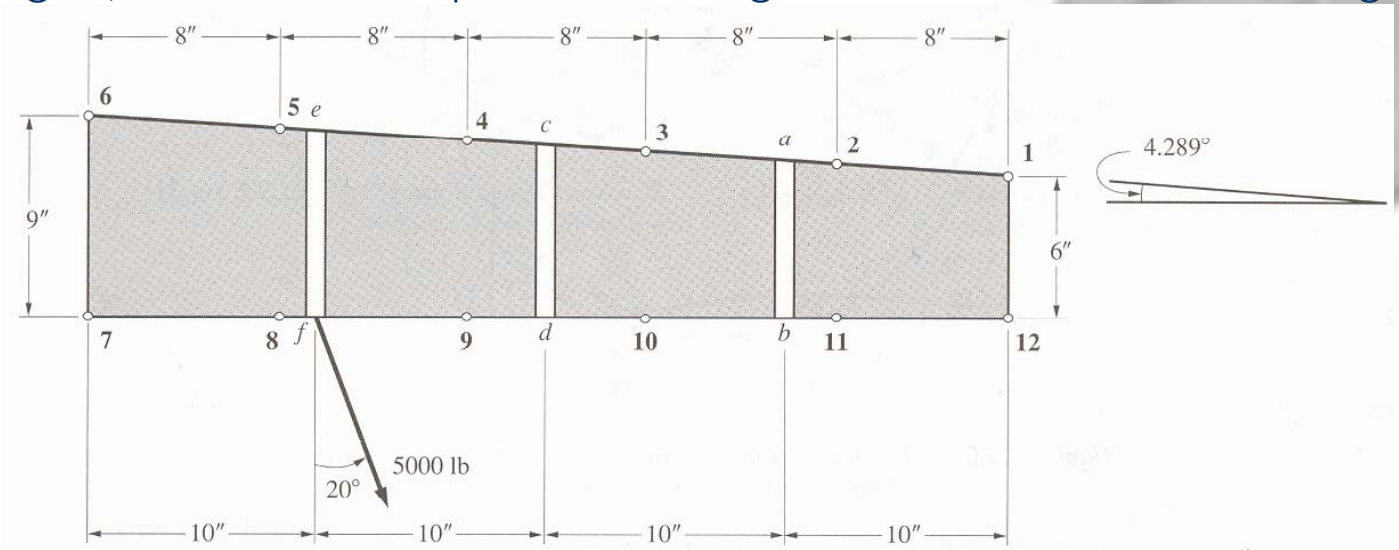

Figure 5.2.17 Wing box rib with a point load applied to the leftmost vertical stiffener.

5.2 RIB AND BULKHEAD SHEAR FLOW

Rib is removed and replaced by the shear flows acting around the bond line between the rib and the wing skin and spar webs.

1. Calculate the location of the centroid G of the flange area.
2. Compute the area moments of inertia I_y, I_z, and I_{yz} relative to axes through the centroid.
3. Substitute the area moments of inertia, along with $P_y = 5000\cos 20°$ and $P_z = -5000\sin 20°$, into Equation 5.2.4 to obtain the jump in flange load gradients, which are shown in parentheses in the figure.
4. Set the shear flow equal to q_o in one of the webs, say 12–1, and starting with flange 1, work your way counterclockwise around the section, applying Equation 5.2.3, "shear flow out equals shear flow in plus flange load gradient," at each flange, assuming all shear flows are counterclockwise, to calculate each of the web shear flows in terms of q_o.
5. Set the moment of the shear flow distribution about a point, say f, equal to the moment of the applied load about that same point. Solve the equation for the only unknown, namely q_o.
6. For each of the twelve skins, substitute q_o into the expression for shear flow computed in Step 4, finally yielding the shear flows shown in Figure 5.2.18.

5.2 RIB AND BULKHEAD SHEAR FLOW

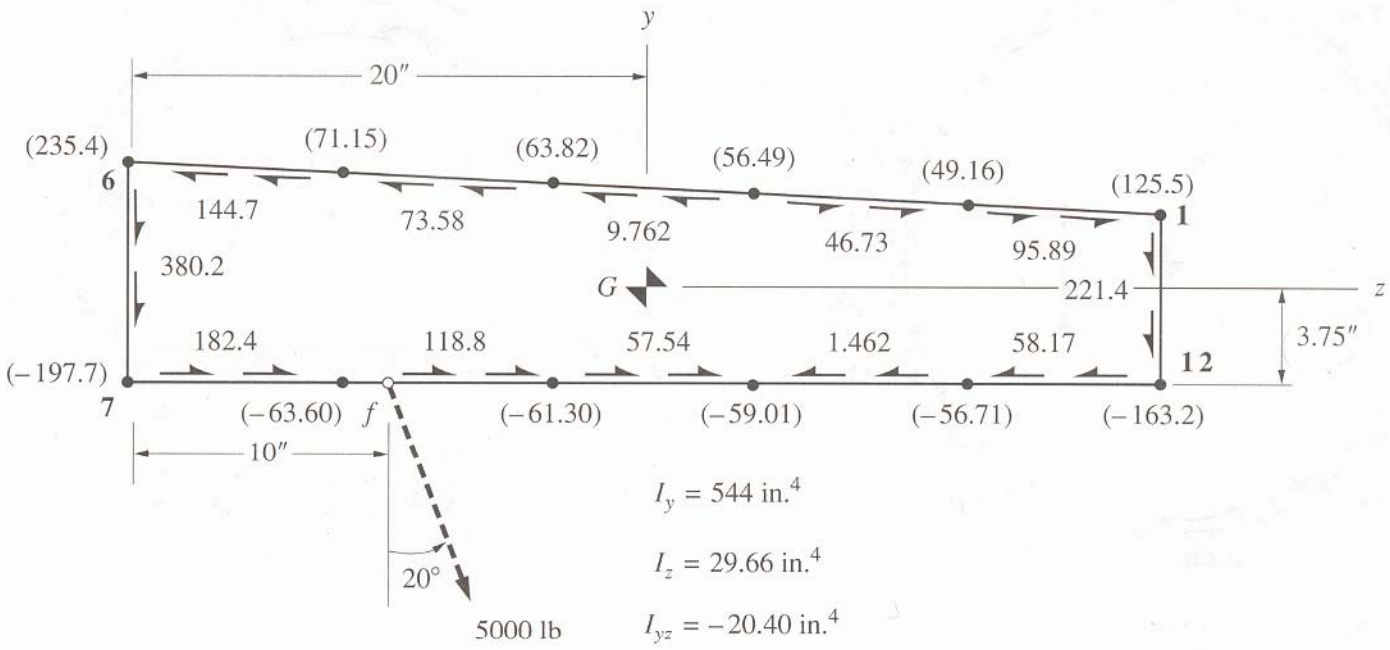

Figure 5.2.18 Shear flows (lb/in.) on the skin around the rib–skin interface. The jumps in flange load gradients (lb/in.) are in parentheses.

5.2 RIB AND BULKHEAD SHEAR FLOW

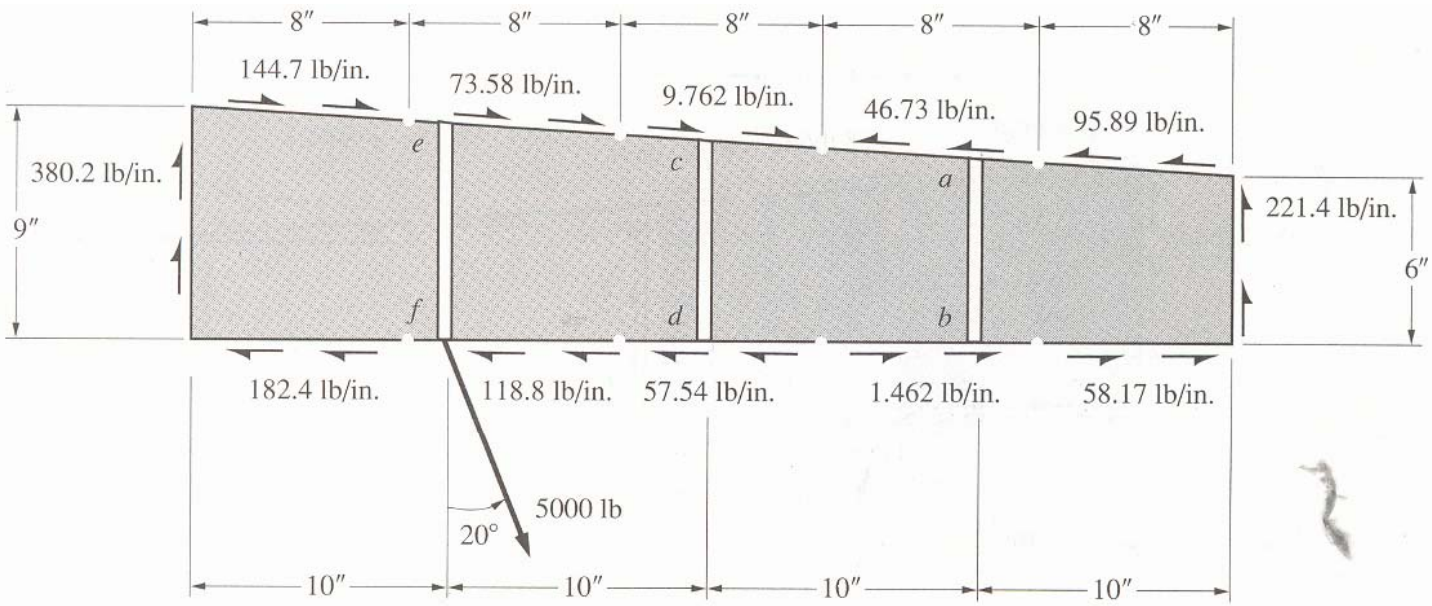

Figure 5.2.19 Shear flows acting on the rib in reaction to the 5000 lb load.

$$\bar{q}_1 = 380.2 \times \frac{9}{8.25} = 414.8 \text{ lb/in.}$$

5.2 RIB AND BULKHEAD SHEAR FLOW

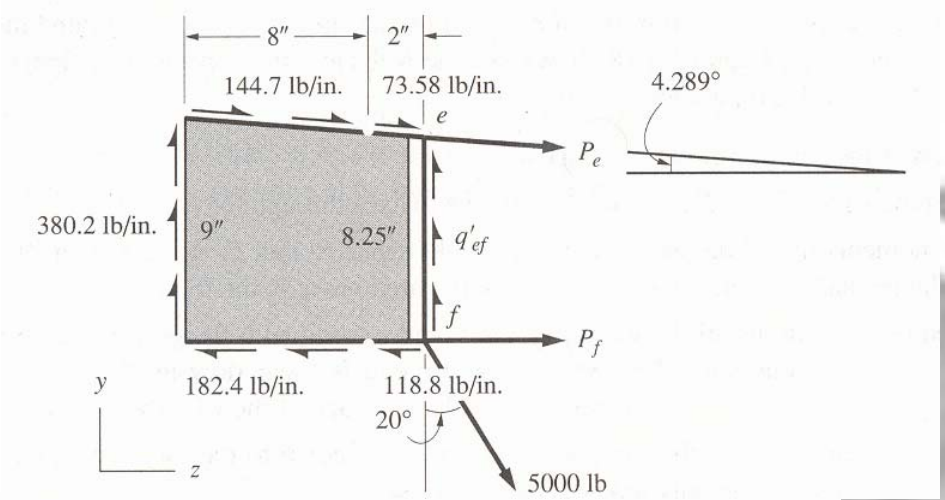

$$\sum M_e = 0: \quad 8.25P_f + 8.25 \times 5000 \sin 20^\circ - 10 \times (380.2 \times 9) - 8.25 \times (182.4 \times 8) - 8.25 \times (118.8 \times 2) = 0$$

$$\sum F_z = 0: \quad P_e \cos 4.289^\circ + P_f + 5000 \sin 20^\circ - 182.4 \times 8 - 118.8 \times 2 + 144.7 \times 8 + 73.58 \times 2 = 0$$

$$\sum F_y = 0: \quad -P_e \sin 4.289 + 8.25 q'_{ef} - 5000 \cos 20^\circ + 380.2 \times 9 - 144.7 \times (8 \tan 4.289^\circ) - 73.58 \times (2 \tan 4.289^\circ) = 0$$

$$P_f = 4134 \text{ lb} \qquad P_e = -5468 \text{ lb} \qquad q'_{ef} = 117.0 \text{ lb/in.}$$

$$\bar{q}_2 = 117.0 \times \frac{8.25}{7.5} = 128.7 \text{ lb/in.}$$

5.2 RIB AND BULKHEAD SHEAR FLOW

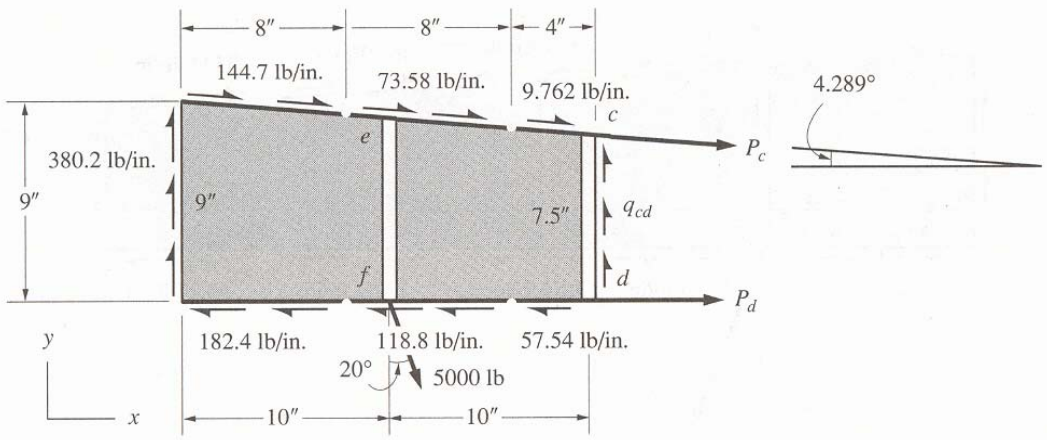

Figure 5.2.21 Free-body diagram of a portion of the rib extending from the extreme left to just past the vertical stiffener cd.

$$\sum M_c = 0: \quad 7.5P_d + 7.5 \times 5000 \sin 20^\circ + 10 \times 5000 \cos 20^\circ - 20 \times (380.2 \times 9)$$
$$- 7.5 \times (182.4 \times 8 + 118.8 \times 8 + 57.54 \times 4) = 0$$

$$\sum F_z = 0: \quad P_c \cos 4.289^\circ + P_d + 5000 \sin 20^\circ + (144.7 + 73.58 - 182.4 - 118.8) \times 8$$
$$+ (9.762 - 57.54) \times 4 = 0$$

$$\sum F_y = 0: \quad - P_c \sin 4.289^\circ + 7.5 q_{cd} - 5000 \cos 20^\circ + 380.2 \times 9$$
$$- (144.7 + 73.58) \times (8 \tan 4.289^\circ) - 9.762 \times (4 \tan 4.289^\circ) = 0$$

$$P_d = 3790 \text{ lb} \qquad P_c = -4658 \text{ lb} \qquad q_{cd} = 141.6 \text{ lb/in.}$$

$$\bar{q}_3 = 141.6 \times \frac{7.5}{6.75} = 157.3 \text{ lb/in.}$$

5.2 RIB AND BULKHEAD SHEAR FLOW

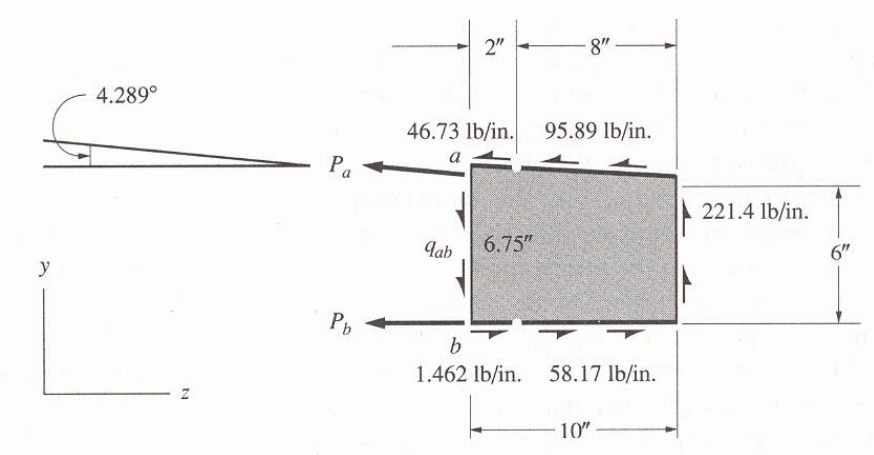

Figure 5.2.22 Free-body diagram of the rib segment between vertical stiffener *ab* and the extreme right end.

$$\sum M_a = 0: \quad -6.75P_b + 10 \times (221.4 \times 6) + 6.75 \times (1.462 \times 2 + 58.17 \times 8) = 0$$

$$\sum F_z = 0: \quad -P_a \cos 4.289^\circ - P_b + (1.462 - 46.73) \times 2 + (58.17 - 95.89) \times 8 = 0$$

$$\sum F_y = 0: \quad +P_a \sin 4.28^\circ - 6.75q_{ab} + 221.4 \times 6 + 46.73 \times (2 \tan 4.289^\circ)$$
$$+ 95.89 \times (8 \tan 4.289^\circ) = 0$$

$$P_b = 2436 \text{ lb} \qquad P_a = -2836 \text{ lb} \qquad q_{ab} = 174.9 \text{ lb/in.}$$

$$\bar{q}_4 = 174.9 \times \frac{6.75}{6} = 221.4 \times \frac{6}{6.75} = 196.8 \text{ lb/in.}$$

5.2 RIB AND BULKHEAD SHEAR FLOW

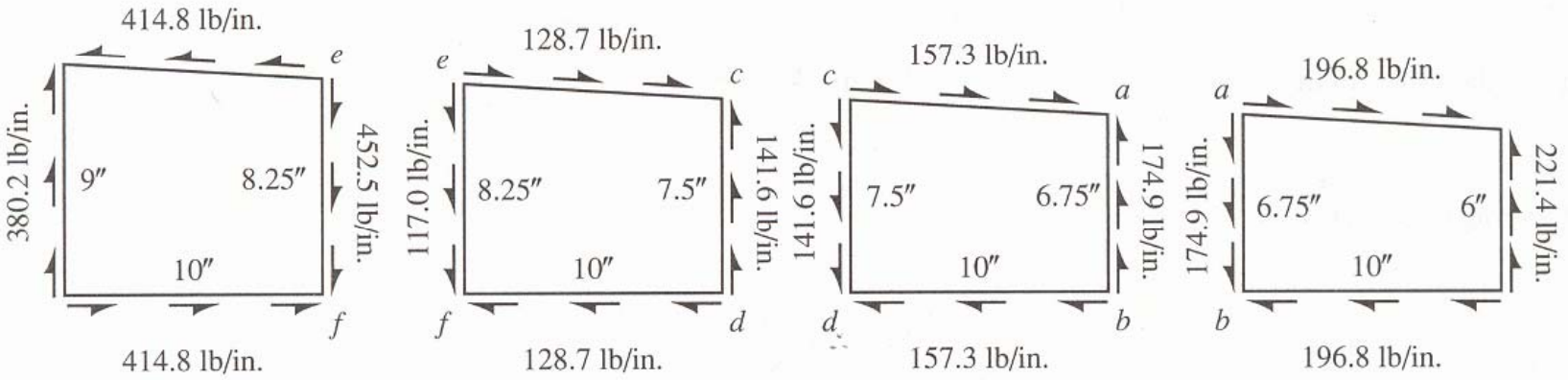

Figure 5.2.23 Shear flows around the boundaries of the rib webs.

The average shear flows are shown on the nonparallel edges.

5.3 SHARE FLOW AROUND CUTOUTS

What effect do the cutouts have on the shear flow distribution?

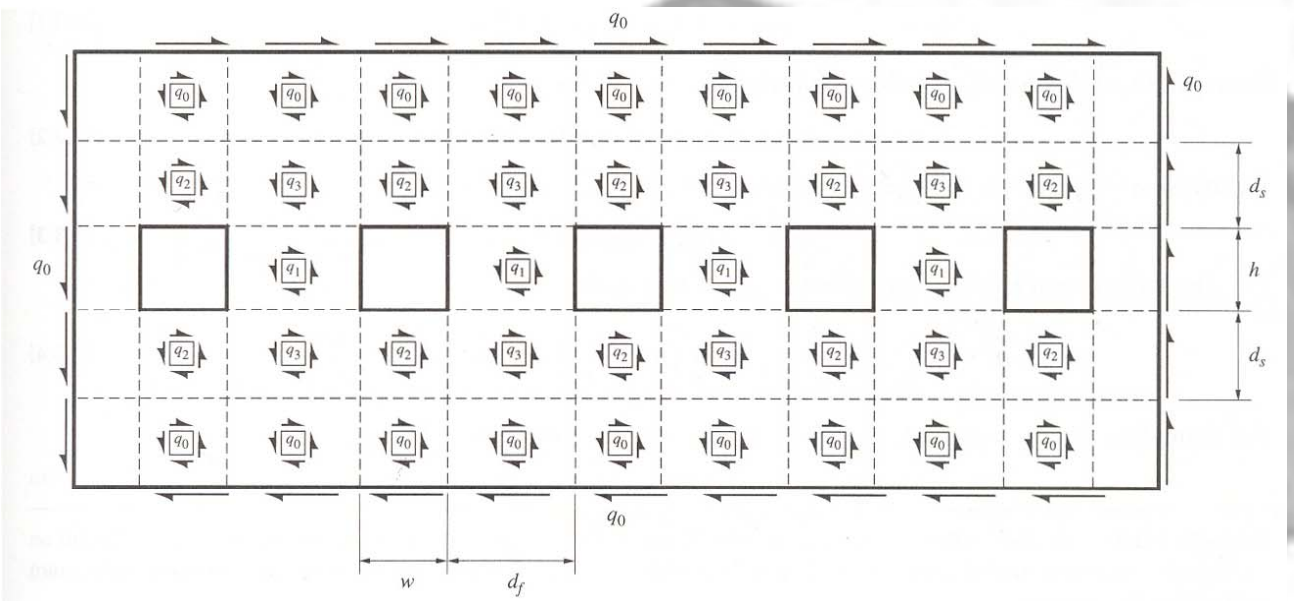

Figure 5.3.1 Portion of a fuselage panel with regularly spaced cutouts (windows).

Assumtion : The effect of the windows on the shear flow pattern does not extend more than one shear panel beyond the top and bottom of the cutouts.

5.3 SHARE FLOW AROUND CUTOUTS

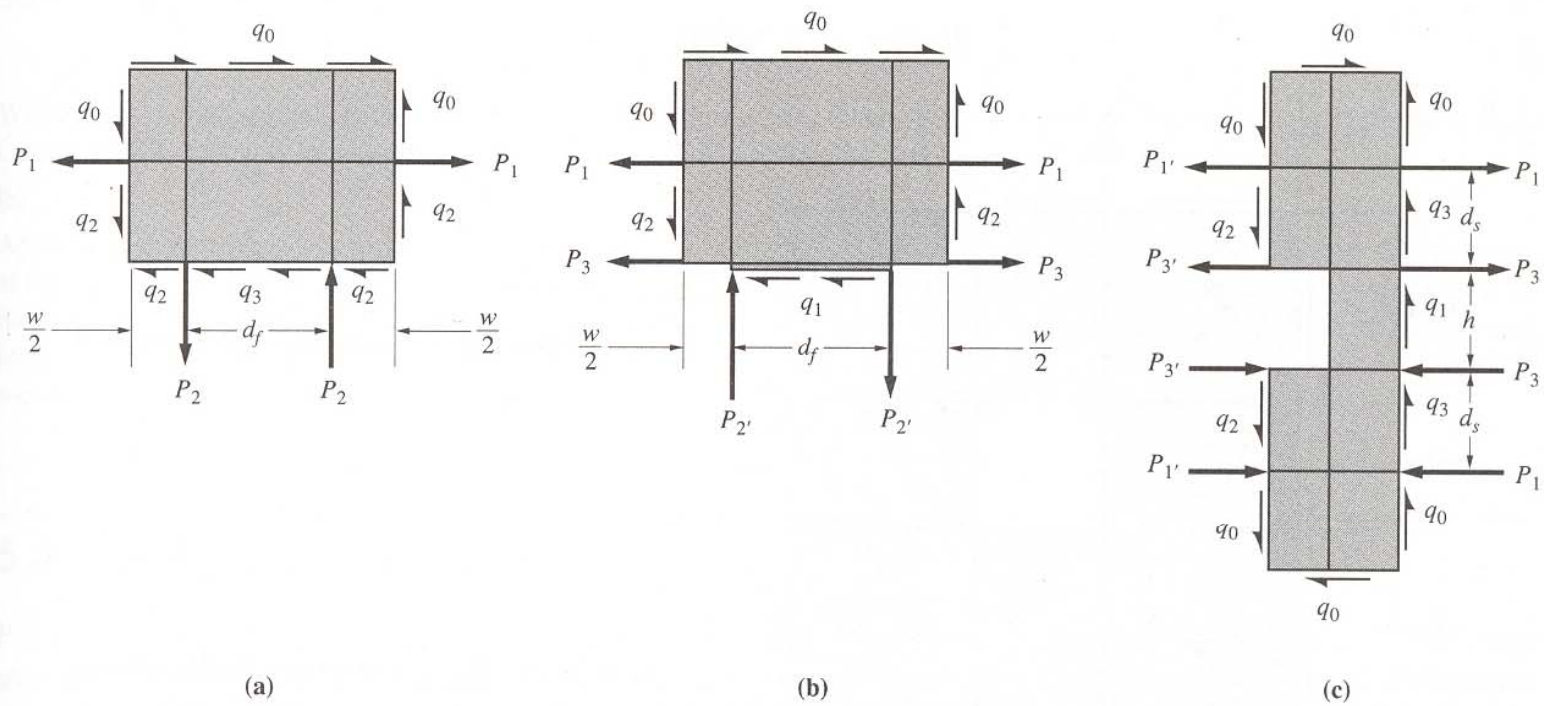

Figure 5.3.2 Free-body diagrams of portions of the panel: (a) Spans the midpoints of the stringer above two adjacent cutouts, the top edge extending into the uniform shear flow region and the bottom edge lying just above the top of the window line; (b) same as in (a), except the bottom edge extends into the panel between the windows; (c) the top and bottom edges extend to the uniform shear flow region; the left edge cuts through the midpoint of a window, and the right edge extends into the region between windows.

5.3 SHARE FLOW AROUND CUTOUTS

For the free-body diagram in Figure 5.3.2a, the equilibrium of forces in the horizontal direction requires that

$$q_2 w + q_3 d_f = q_0 \left(d_f + w\right)$$

From part (b) of the figure, we deduce similarly that

$$q_1 d_f = q_0 \left(d_f + w\right)$$

Finally, summing forces in the vertical direction in Figure 5.3.2c yields

$$q_1 h - 2q_2 d_s + 2q_3 d_s = 0$$

The solution of these three equations for q_1, q_2, q_3 is

$$q_1 = q_0 \left(1 + \frac{w}{d_f}\right) \quad q_2 = q_0 \left(1 + \frac{h}{2d_s}\right) \quad q_3 = q_0 \left(1 - \frac{hw}{2d_f d_s}\right)$$

5.3 SHARE FLOW AROUND CUTOUTS

Example 5.3.1

The flat, stiffened, panel structure in Figure 5.3.3a is loaded by a uniform shear flow q_0 = 50 KN / m on its boundary, as shown. (a) Calculate the independent shear flows q_1 and q_2. (b) Find the location and value of the maximum load within the stiffeners.

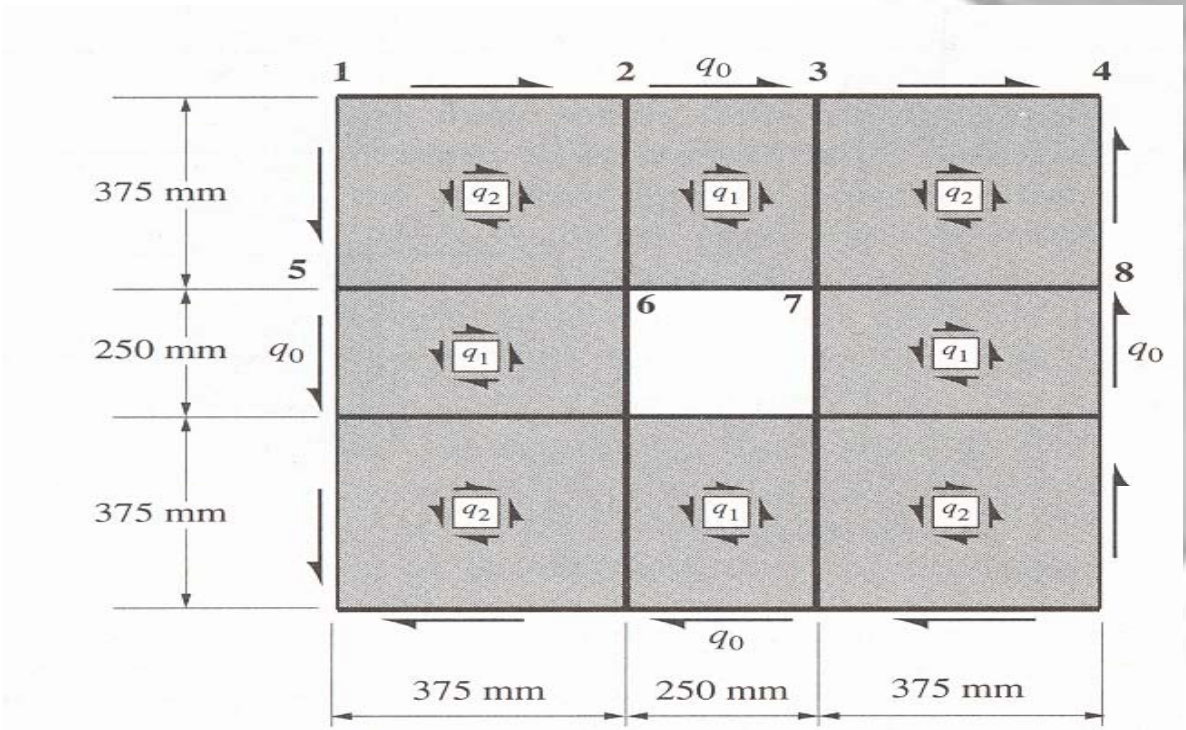

5.3 SHARE FLOW AROUND CUTOUTS

$$-0.250q_1 - 2 \times 0.375q_2 + 50 = 0$$

$$0.250q_1 + 0.750q_2 = 50$$

$$-2 \times 0.375q_1 + 0.250q_1 + 2 \times 0.375q_2 = 0$$

$$q_1 = 66.67 \text{ kN/m} \quad q_2 = 44.44 \text{ kN/m}$$

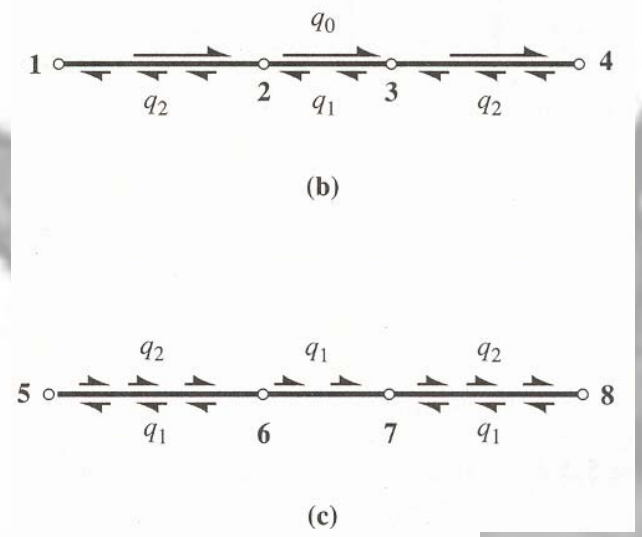

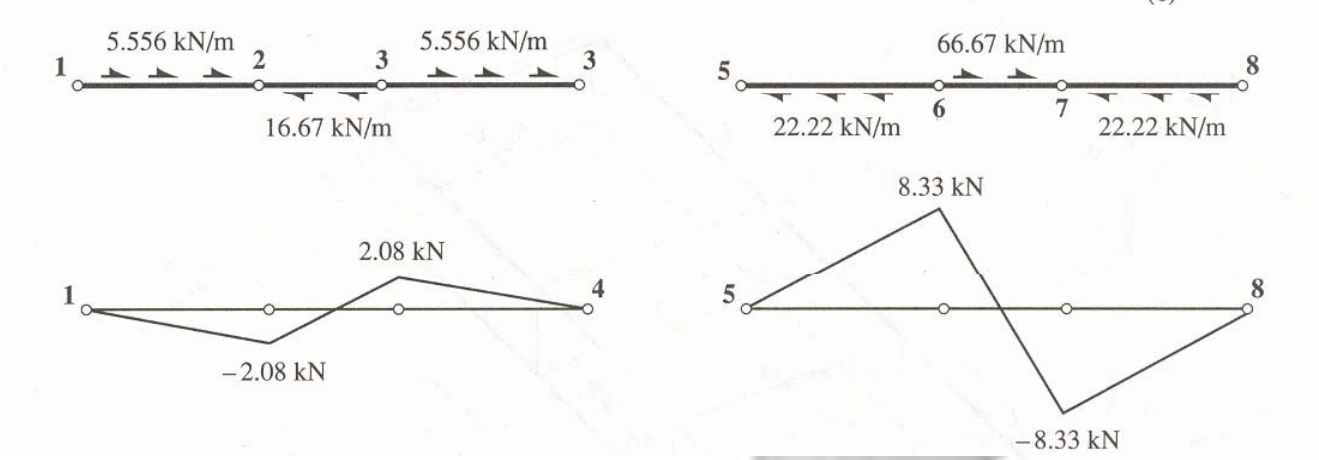

Maximum axial load occurs in the stiffeners adjacent to the hole, at its corners.

5.4 BOX BEAM CUTOUTS

We can determine the effect of a cutout on an idealized wing box or fuselage structure

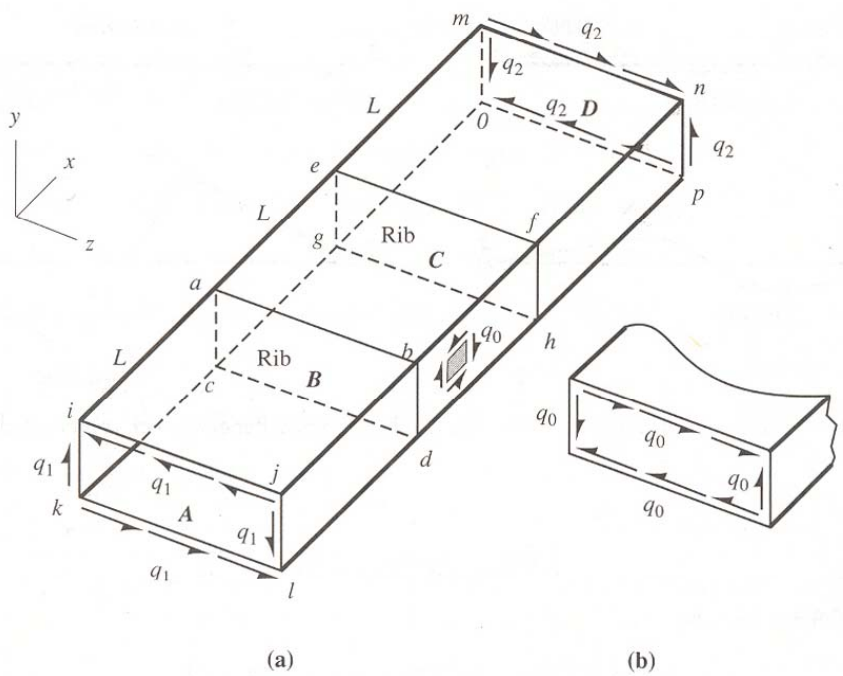

Figure 5.4.1 (a) Rectangular box beam with shear flow q_o applied as shown to the vertical panel *bdhf* of the central bay. (b) Shear flow around a section through the central bay.

5.4 BOX BEAM CUTOUTS

The net force on the stringer

$$-2(q_1 L) + 2(q_0 L) - 2(q_2 L) = 0$$

$$q_1 + q_2 = q_0$$

By symmetry,

$$q_1 = q_2 = \frac{q_o}{2}$$

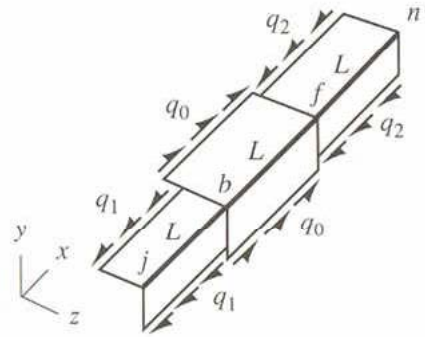

Figure 5.4.2 Free-body diagram of a stringer, through which the shear flow q_o is related to the shear flow in the adjacent bays.

The axial load's maximum value P occurs at each end of the center bay.

$$P = 2 \times \left(\frac{q_o}{2} L\right) = q_o L$$

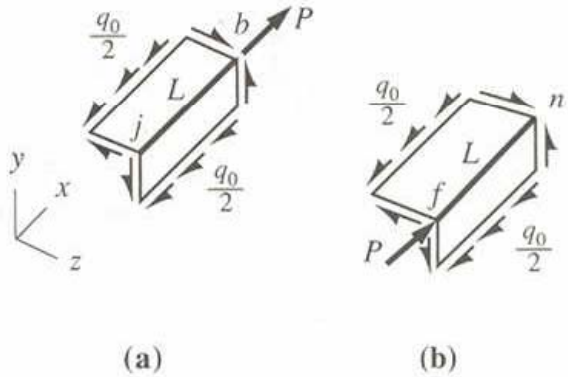

Figure 5.4.3 Free-body diagrams of segments of the stringer spanning (a) the fore bays and (b) the aft bays.

5.4 BOX BEAM CUTOUTS

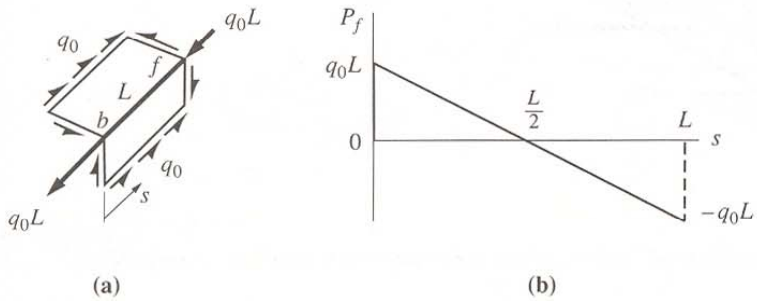

Figure 5.4.4 (a) Free-body diagram of a stringer segment spanning the central bay. (b) Flange load versus position within the central bay.

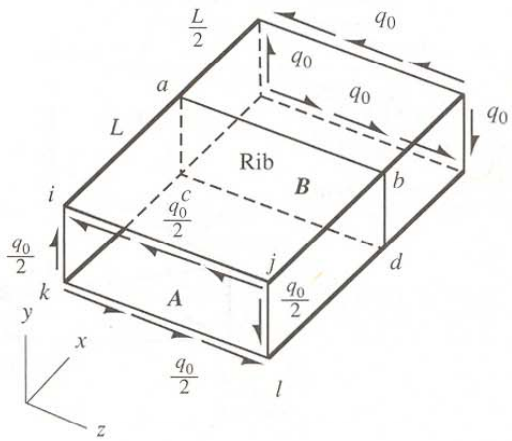

Figure 5.4.5 Free-body diagram of one-half of the structure, showing the shear flows in the central and forward bays.

The stringer loads are zero at each end of the figure.

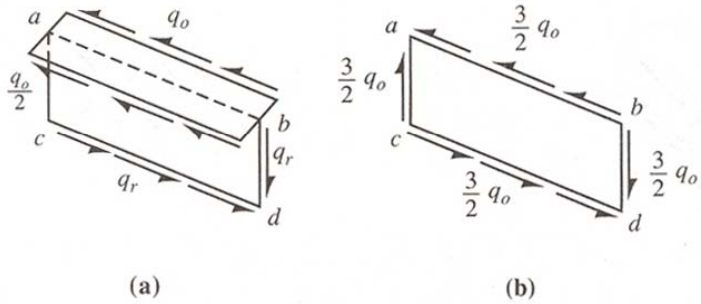

Figure 5.4.6 (a) Free-body diagram of the rib at B and a portion of the top panels. (b) The shear flows required for equilibrium of the rib.

5.4 BOX BEAM CUTOUTS

Example 5.4.1

Calculate the shear flows in the spar webs and cover skins of the idealized wing box shown in Figure 5.4.7. The geometric properties of the constant cross section are listed. The uniformly distributed airloads (15 lb/in, left, 3 lb/in, drag) on the wing have been lumped at the ribs, which are spaced 20 inches apart.

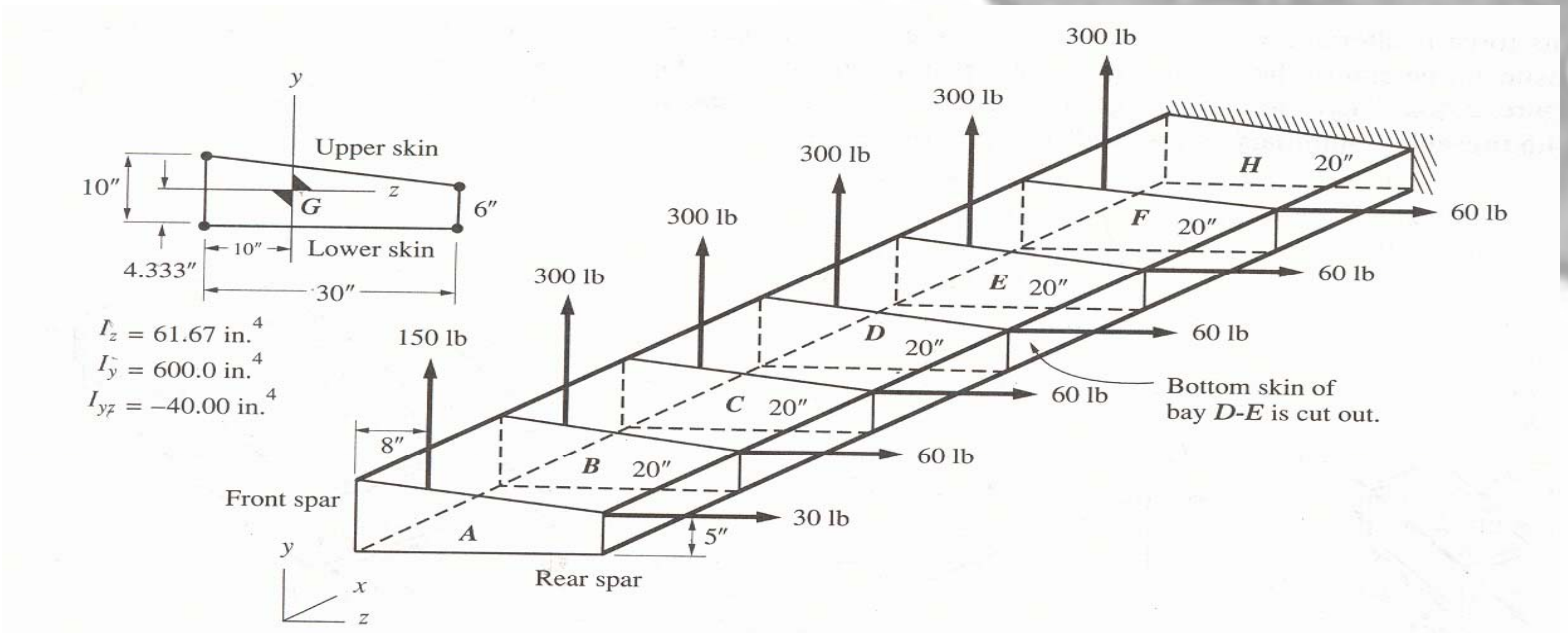

Figure 5.4.7 Idealized, constant-cross-section, cantilevered, multi-bay box beam with the bottom skin of bay *D-E* removed.

5.4 BOX BEAM CUTOUTS

Analyze the structure as thought there were no cutout,using Beam theory and methods of Chapter 4.

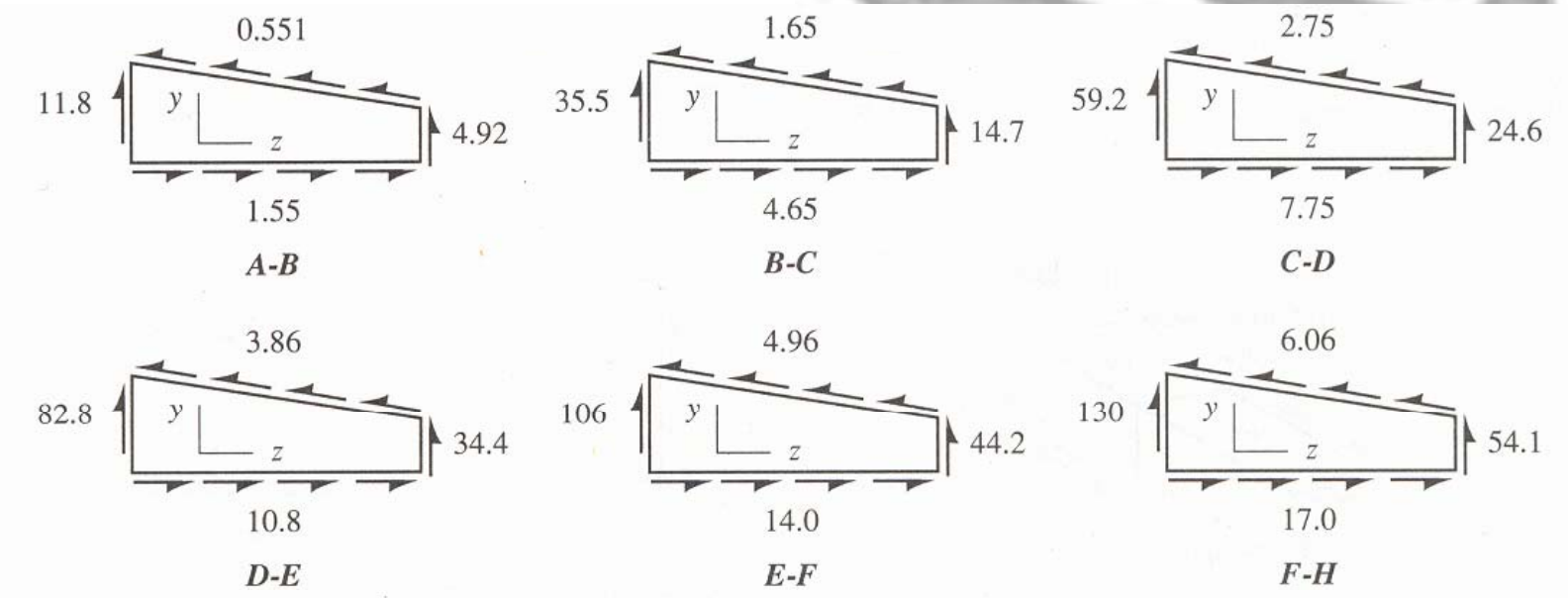

Figure 5.4.8 Shear flows (lb/in.) around each of the bays of the beam in Figure 5.4.7, if there is no cutout.

5.4 BOX BEAM CUTOUTS

$$(6q_1) \times 30 - (30 \times 10.8) \times 10 = 0$$

$$q_1 = 18.1 \ \text{lb/in.}$$

$$q_2 = 10.8 \ \text{lb/in.}$$

$$6q_1 - 4q_2 - 10q_3 = 0$$

$$q_3 = 6.52 \ \text{lb/in.}$$

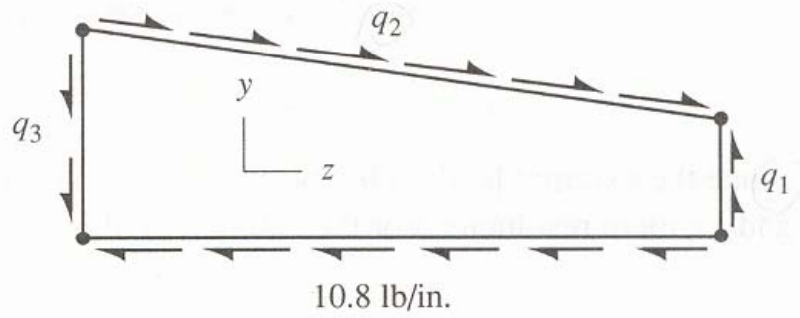

Figure 5.4.10 Self-equilibrating shear flows in bay *D-E*.

$$20q_4 + 20q_5 - 10 \times 18.1 - 10 \times 10.8 = 0$$

$$-q_5 + q_7 = 0$$

$$-6q_4 + 4q_5 + 10q_6 = 0$$

$$(30q_7) \times 10 - (6q_4) \times 30 = 0$$

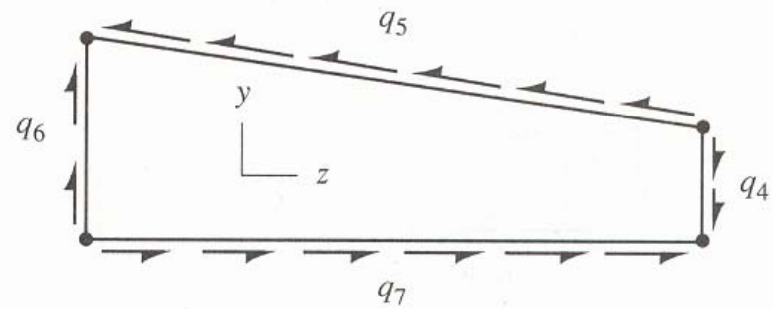

Figure 5.4.12 Self-equilibrating shear flows around bay *C-D*.

$q_4 = 9.05 \ \text{lb/in.}$ $\quad q_5 = q_7 = 5.43 \ \text{lb/in.}$ $\quad q_6 = 3.26 \ \text{lb/in.}$

5.4 BOX BEAM CUTOUTS

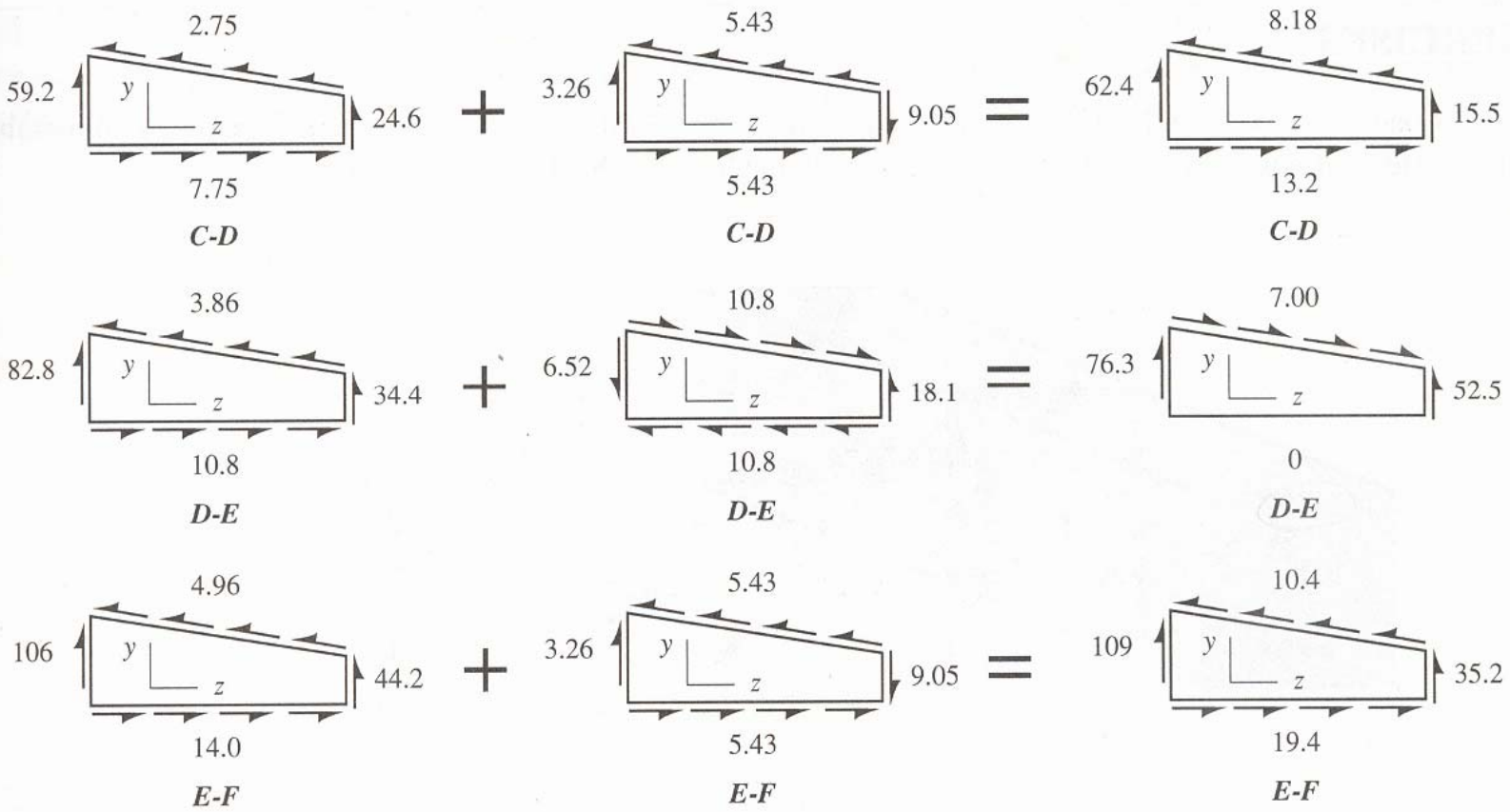

Figure 5.4.13 Superposition of the shear flows due to the external loads (left) and those (center) arising from the reversed shear flow applied to bay *D-E*, yielding the shear flows modified by the presence of the cutout. All shear flow units are in lb/in.