# Gasket

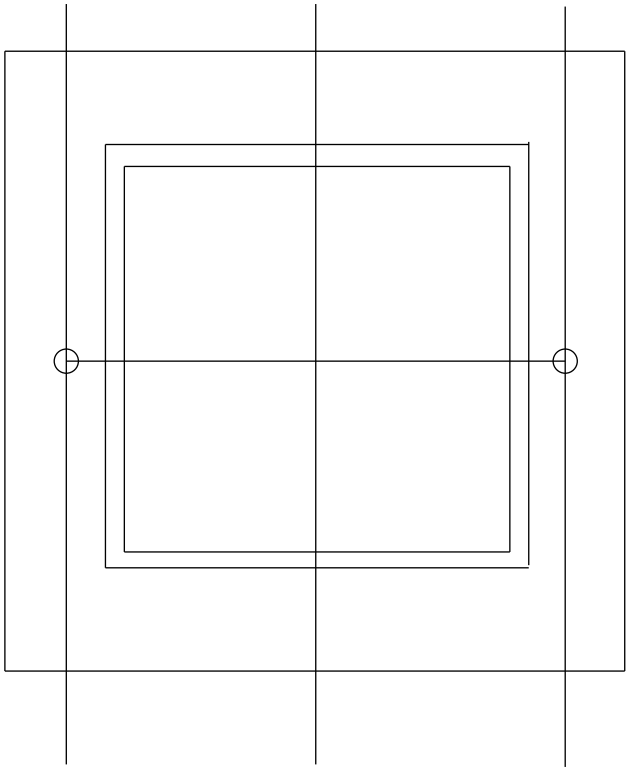

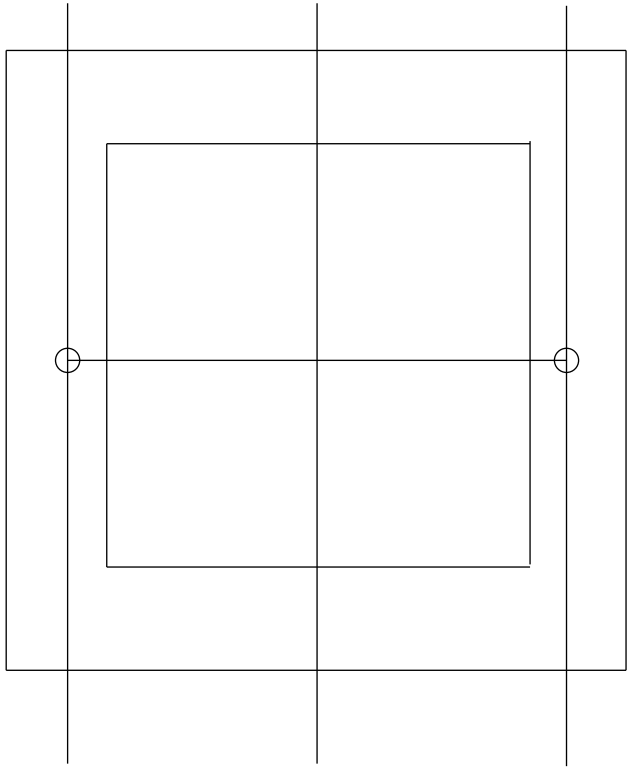
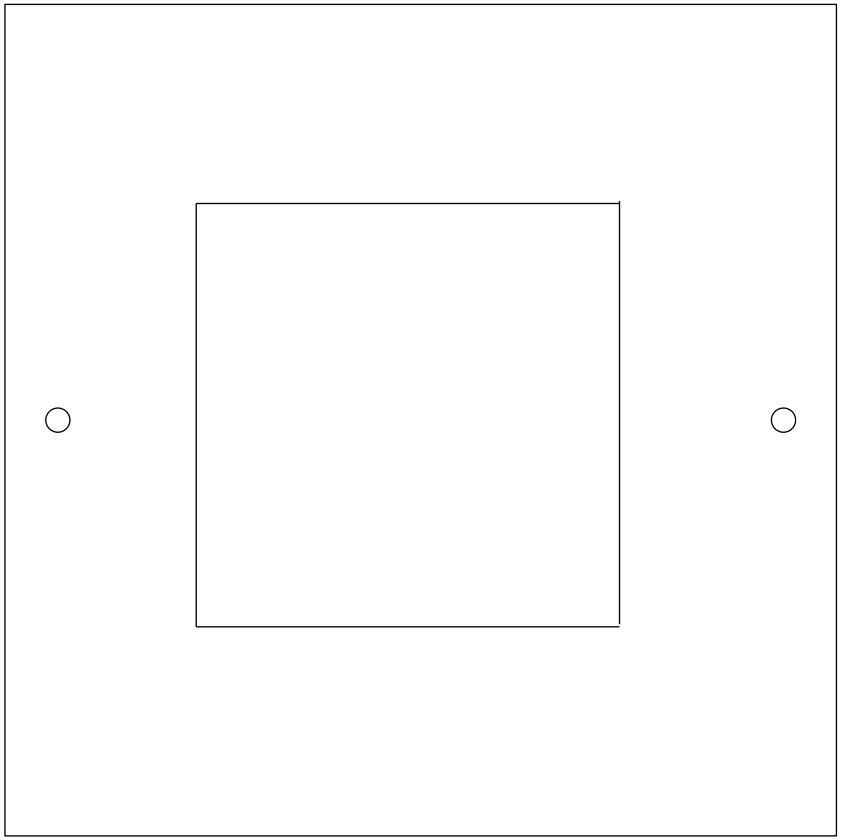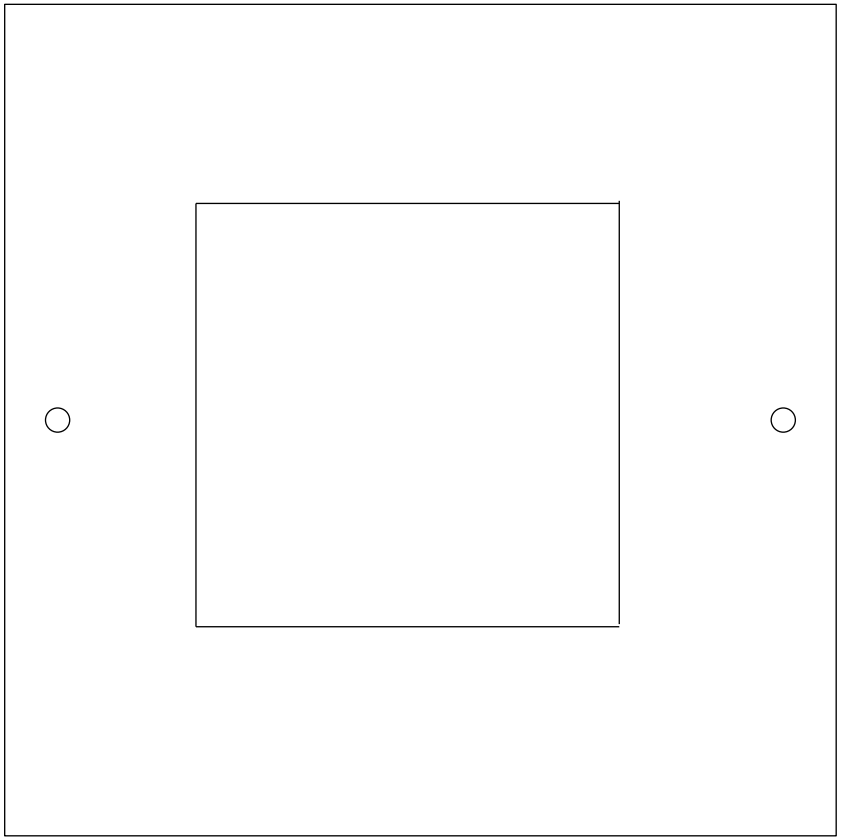
# GDL