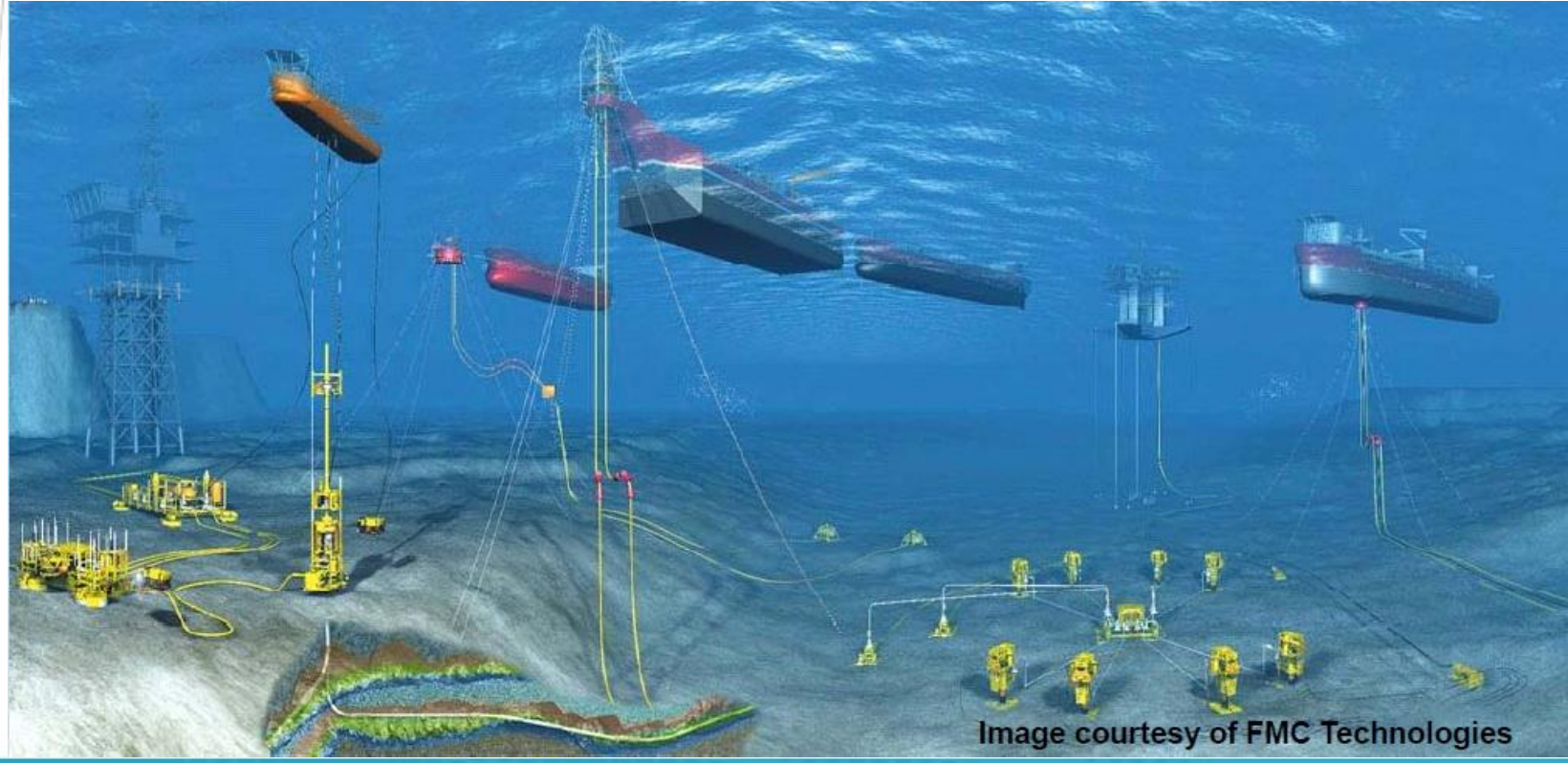

Offshore Equipment

Yutaek Seo

Choosing a process

Introduction

- This chapter explains how the various components are combined into a production system.
- A process flowsheet or process flow diagram (PFD) is used to describe the system.

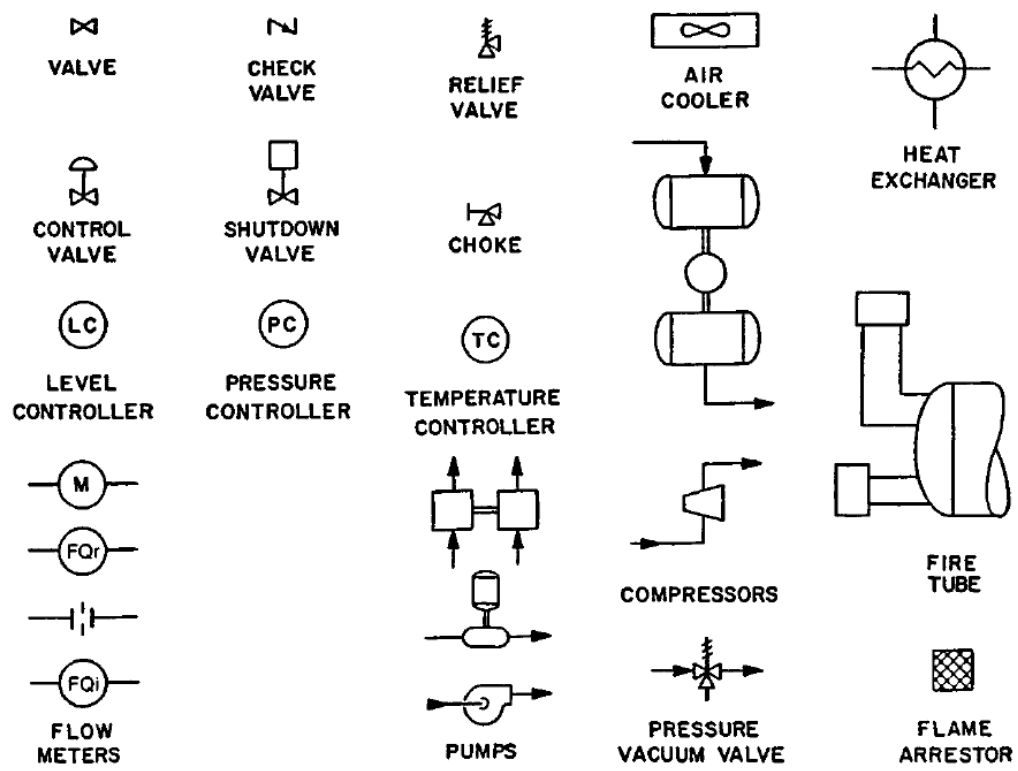

Figure 2-2. Common flowsheet symbols.

Figure 2-1. Typical flowsheet

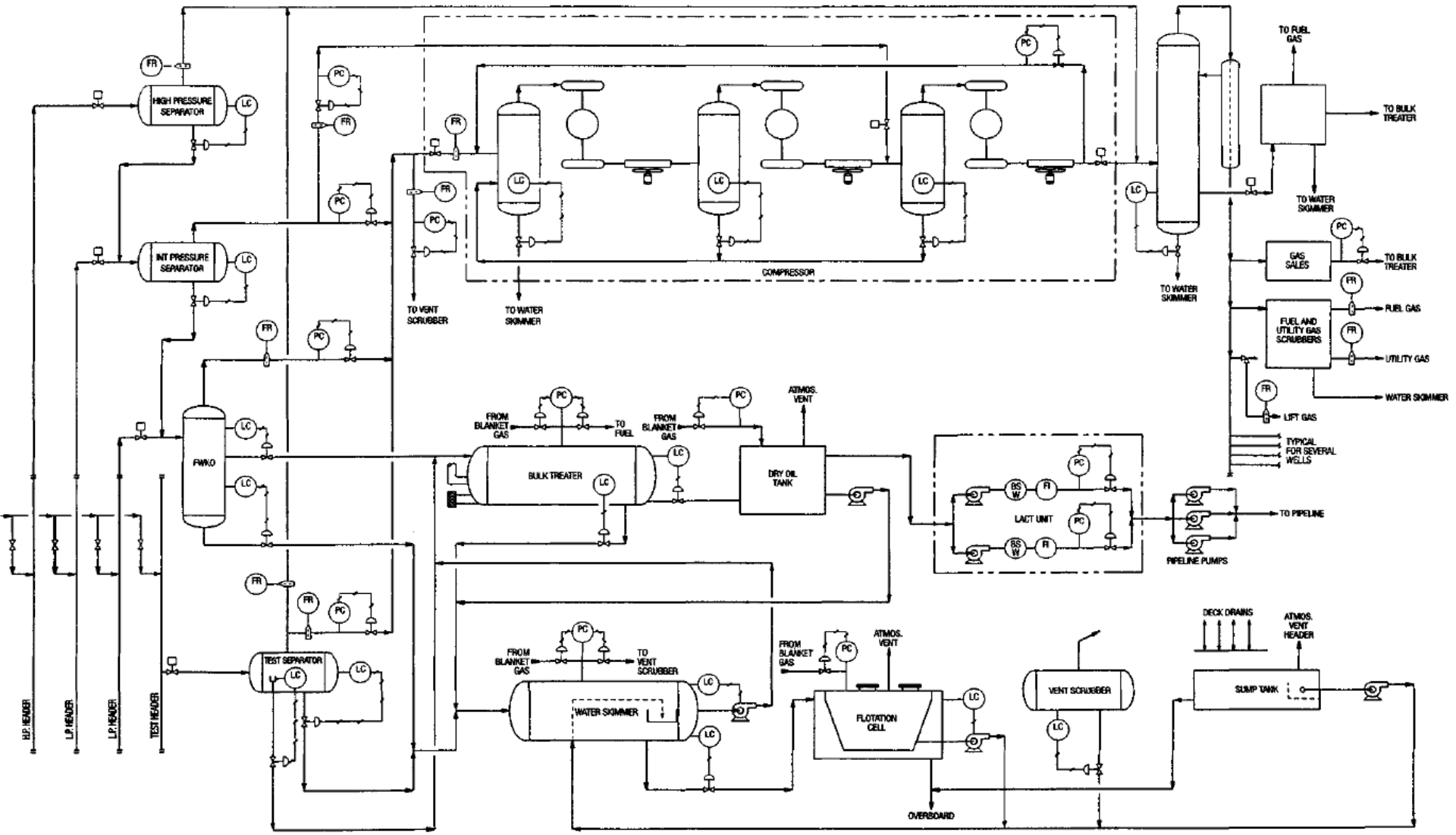

Controlling the process

- Operation of control valve

  : Control valves are used throughout the process to control pressure, level, temperature, or flow. This section focuses primarily on the functions of this equipment.

  : Figure 2-3 shows a very common single-port globe body control valve. All control valves have a variable opening or orifice. For a given pressure drop across the valve, the larger the orifice the greater the flow through the valve.

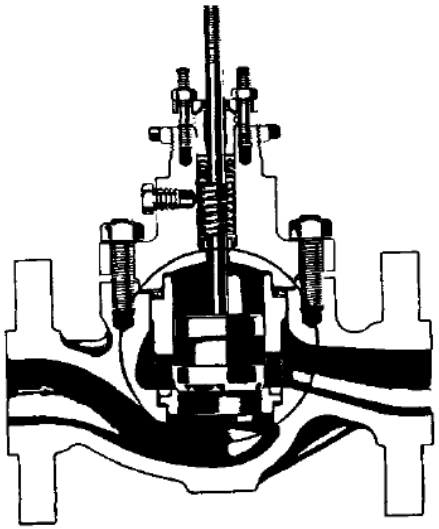

Figure 2-3. Typical single-port body control valve (*courtesy of Fisher Controls International, Inc.*).

- In Figure 2-3 the orifice is made larger by moving the valve stem upward. This moves the plug off the seat, creating a larger annulus for flow between the seat and the plug. Similarly, the orifice is made smaller by moving the valve stem downward.
- The most common way to affect this motion is with a pneumatic actuator, such as that shown in Figure 2-4.
- Instrument air or gas applied to the actuator diaphragm overcomes a spring resistance and either moves the stem upward or downward.
- The action of the actuator must be matched with the construction of the valve body to assure that the required failure mode is met.

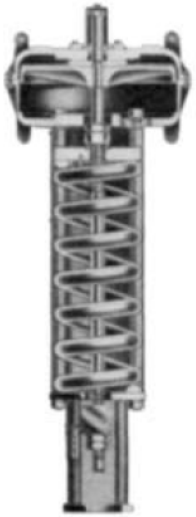

Figure 2-4. Typical pneumatic actuator (*courtesy of Fisher Controls International, Inc.*).

- (Fail close) That is, if it is desirable for the valve to fail closed, then the actuator and body must be matched so that on failure of the instrument air or gas, the spring causes the stem to move in the direction that blocks flow (i.e., fully shut). This would normally be the case for most liquid control valves.
- (Fail open) If it is desirable for the valve to fail to open, as in many pressure control situations, then the spring must cause the stem to move in the fully open direction.

- Pressure control

  : The hydrocarbon fluid produced from a well is made up of many components ranging from methane, the lightest and most gaseous hydrocarbon, to some very heavy and complex hydrocarbon compounds. Because of this, whenever there is a drop in fluid pressure, gas is liberated.

  : The most common method of controlling pressure is with a pressure controller and a backpressure control valve.

  : The pressure controller senses the pressure in the vapor space of the pressure vessel or tank. By regulating the amount of gas leaving the vapor space, the backpressure control valve maintains the desired pressure in the vessel.

  : If too much gas is released, the pressure in the vessel decreases.

  : If insufficient gas is released, the pressure in the vessel increases.

  : In most instances, there will be enough gas flashed from liquid while reducing pressure. However, under some conditions like small pressure drop thorough the vessel or low GOR case, it may be necessary to provide make-up or blanket gas. (gas source: fuel gas mostly)

- Level control

  : It is also necessary to control the gas/liquid interface or the oil/water interface in process equipment.

  : This is done with a level controller and liquid dump valve.

  : The most common form of level controller is a float, although electronic sensing devices can also be used.

  : If the level begins to rise, the controller signals the liquid dump valve to open and allow liquid to leave the vessel.

  : If the level in the vessel begins to fall, the controller signals the liquid dump valve to close and decrease the flow of liquid from the vessel.

  : In this manner the liquid dump valve is constantly adjusting its opening to assure that the rate of liquid flowing into the vessel is matched by the rate out of the vessel.

- Temperature control

  : The way in which the process temperature is controlled varies.

  : In a heater, a temperature controller measures the process temperature and signals a fuel valve to either let more or less fuel to the burner.

  : In a heat exchanger the temperature controller could signal a valve to allow more or less of the heating or cooling media to bypass the exchanger.

- Flow control

  : It is very rare that flow must be controlled in an oil field process.

  : Normally, the control of pressure, level, and temperature is sufficient.

  : Occasionally, it is necessary to assure that flow is split in some controlled manner between two process components in parallel, or perhaps to maintain a certain critical flow through a component.

  : This can become a complicated control problem and must be handled on an individual basis.

Basic system configuration

- Wellhead and Manifold

  : The production system begins at the wellhead, which should include at least one choke, unless the well is on artificial lift.

  : Most of the pressure drop between the well flowing tubing pressure (FTP) and the initial separator operating pressure occurs across this choke.

  : The size of the opening in the choke determines the flow rate, because the pressure upstream is determined primarily by the well FTP, and the pressure downstream is determined primarily by the pressure control valve on the first separator in the process.

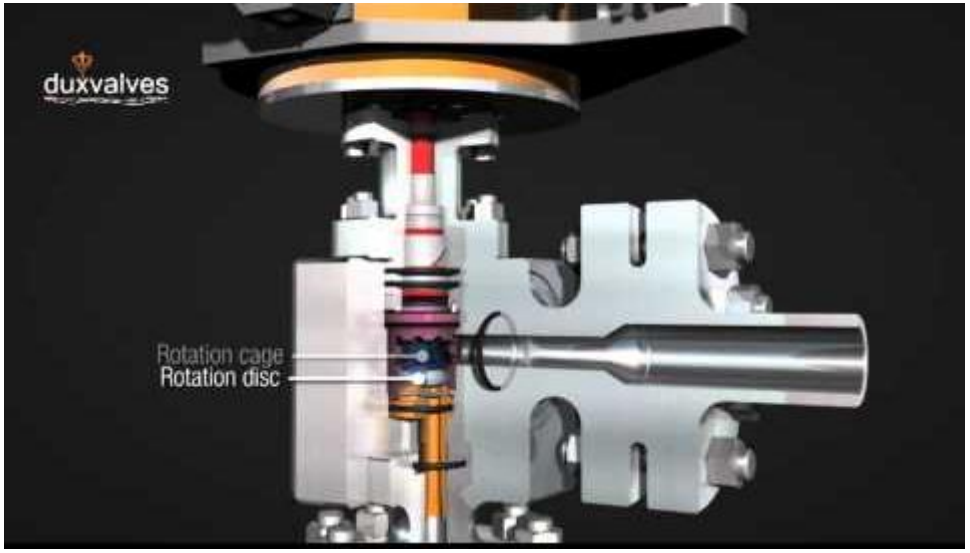

- Separation

Initial separator pressure

: The higher the pressure at separator, the more liquid will be obtained. This liquid contains some light components that vaporize in the stock tank downstream of the separator.

: If the pressure is too high, too many light components will stay in the liquid phase. (they will be lost to gas phase at the stock tank -> pressure increase)

: If the pressure is too low, these light components will not be stabilized into the liquid. (they will be lost to gas phase at the separator -> pressure control)

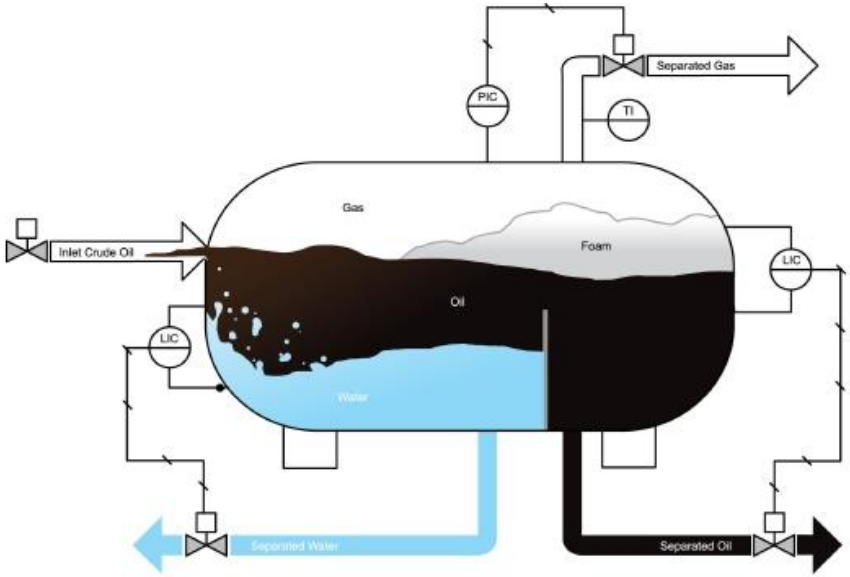

- If the pressure in the vessel is high, the partial pressure for the component will be relatively high and the molecules of that component will tend toward the liquid phase. This is seen by the top line in Figure 2-5 (for single-stage process). As the separator pressure is increased, the liquid flow rate out of the separator increases.
- The problem with this is that many of these molecules are the lighter hydrocarbons (C1, C2, C3), which have a strong tendency to flash to the gas state at stock tank conditions (atmospheric pressure).
- In the stock tank, the presence of these large numbers of molecules creates a low partial pressure for the intermediate range hydrocarbons (C4, C5, C6) whose flashing tendency at stock tank conditions is very susceptible to small changes in partial pressure.
- Thus, by keeping the lighter molecules in the feed to the stock tank we manage to capture a small amount of them as liquids, but we lose to the gas phase many more of the intermediate range molecules. That is why beyond some optimum point there is actually a decrease in stock tank liquids by increasing the separator operating pressure

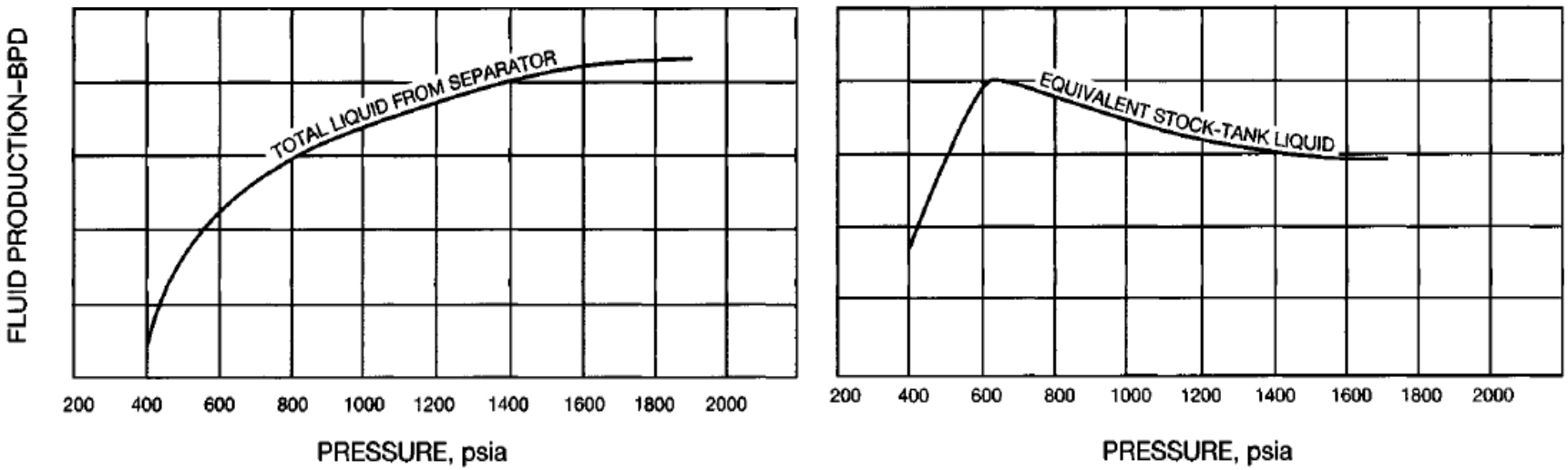

Stage separation

: Figure 2-5 is for single-stage process where gas flashed in separator and stock tank.

: Figure 2-6 shows a three-stage separation process. The liquid is first flashed at an initial pressure and then flashed at successively lower pressures two times before entering the stock tank.

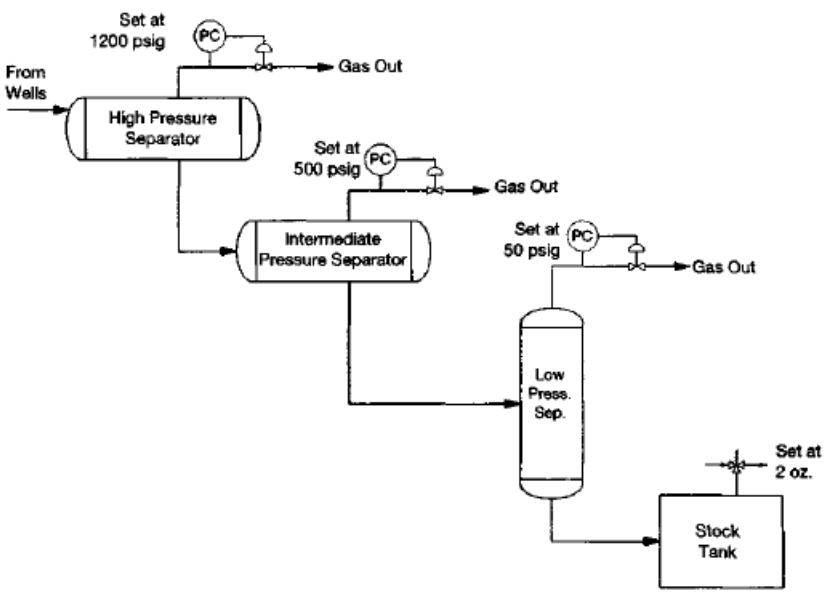

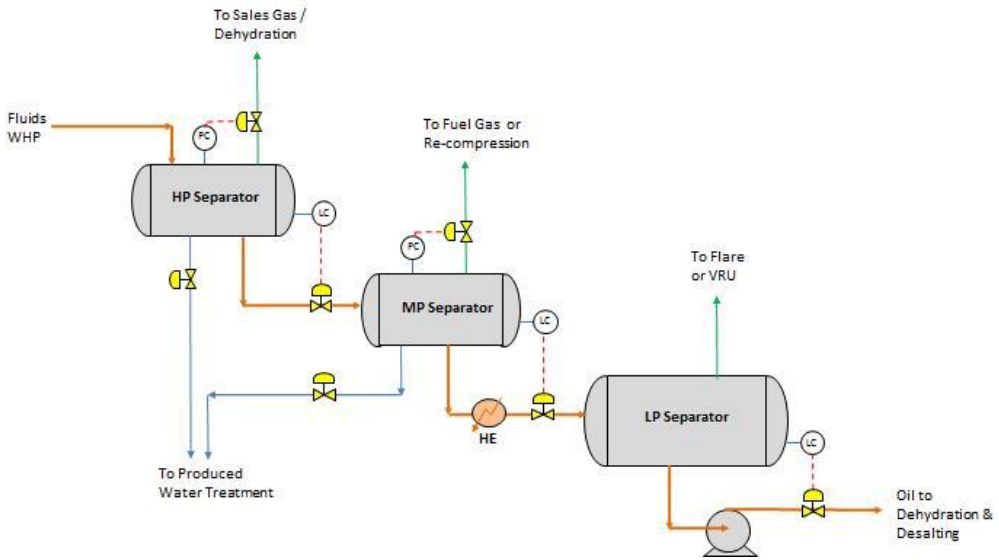

Figure 2-6. Stage separation.

- Because of the multicomponent nature of the produced fluid, it can be shown by flash calculations that the more stages of separation after the initial separation the more light components will be stabilized into the liquid phase.
- As the number of stages approaches infinity, the lighter molecules are removed as soon as they are formed and the partial pressure of the intermediate components is maximized at each stage. The compressor horsepower required is also reduced by stage separation as some of the gas is captured at a higher pressure than would otherwise have occurred.
- This is demonstrated by the example presented in Table 2-1.

Table 2-1
Effect of Separation Pressure for a Rich Condensate Stream

Case	Separation Stages psia	Liquid Produced bopd	Compressor Horsepower Required
I	1215, 65	8,400	861
II	1215, 515, 65	8,496	497
III	1215, 515, 190, 65	8,530	399

Selection of stages

: As more stages are added to the process there is less and less incremental liquid recovery. The diminishing income for adding a stage must more than offset the cost of the additional separator, piping, controls, space, and compressor complexities.

: It is clear that for each facility there is an optimum number of stages. In most cases, the optimum number of stages is very difficult to determine as it may be different from well to well and it may change as the wells' flowing pressure declines with time.

: Table 2-2 is an approximate guide to the number of stages in separation, excluding the stock tank, which field experience indicates is somewhat near optimum.

Table 2-2
Stage Separation Guidelines

Initial Separator Pressure, psig	Number of Stages*
25–125	1
125–300	1–2
300–500	2
500–700	2–3**

** Does not include stock tank.*
*** At flow rates exceeding 100,000 bopd, more stages may be appropriate.*

Other example

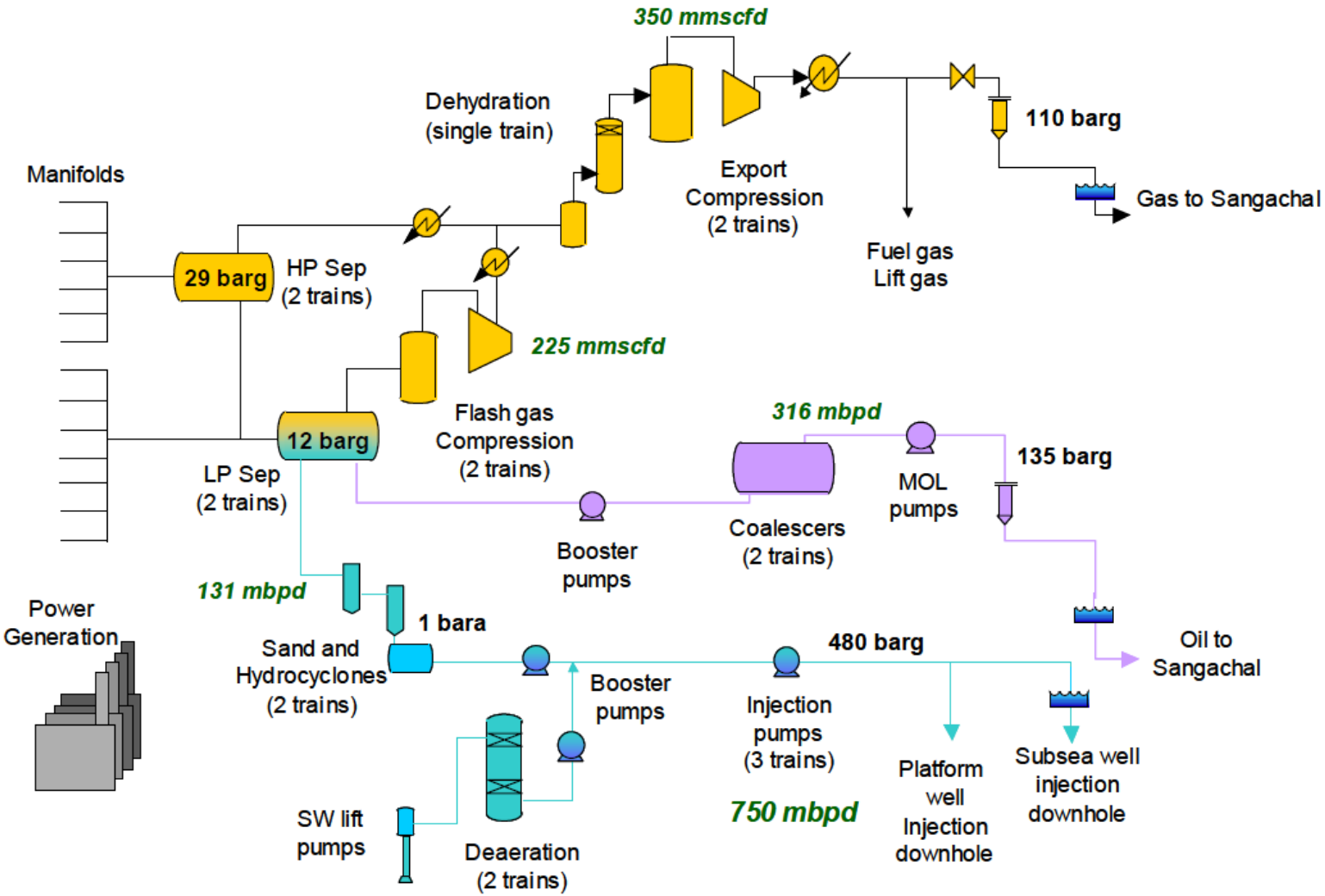

Fields with different flowing tubing pressures

: The discussion to this point has focused on a situation where all the wells in a field produce at roughly the same flowing tubing pressure, and stage separation is used to maximize liquid production and minimize compressor horsepower.

: Often, as in our example flowsheet, stage separation is used because different wells producing to the facility have different flowing tubing pressures.
: This could be because they are completed in different reservoirs, or are located in the same reservoir but have different water production rates.

: By using a manifold arrangement and different primary separator operating pressures, there is not only the benefit of stage separation of high-pressure liquids, but also conservation of reservoir energy.

: High-pressure wells can continue to flow at sales pressure requiring no compression, while those with lower tubing pressures can flow into whichever system minimizes compression.

Separator operating pressures

: A minimum pressure for the lowest pressure stage would be in the 25 to 50 psig range.

: This pressure will probably be needed to allow the oil to be dumped to a treater or tank and the water to be dumped to the water treating system.

: The higher the operating pressure the smaller the compressor needed to compress the flash gas to sales.

: Increasing the low pressure separator pressure from 50 psig to 200 psig may decrease the compression horsepower required by 33%. However, it may also add backpressure to wells, restricting their flow, and allow more gas to be vented to atmosphere at the tank.

: Usually, an operating pressure of between 50 and 100 psig is optimum.

- The operating pressure of the highest pressure separator will be no higher than the sales gas pressure. A possible exception to this could occur where the gas lift pressure is higher than the sales gas pressure.
- In choosing the operating pressures of the intermediate stages it is useful to remember that the gas from these stages must be compressed. Normally, this will be done in a multistage compressor.
- For practical reasons, the choice of separator operating pressures should match closely and be slightly greater than the compressor interstage pressures. The most efficient compressor sizing will be with a constant compressor ratio per stage. Therefore, an approximation of the intermediate separator operating pressures can be derived from the compression ratio as follows,

$$R = \left[\frac{P_d}{P_s}\right]^{1/n}$$

where

R = ratio per stage

P_d = discharge pressure, psia

P_s = suction pressure, psia

n = number of stages

- In order to minimize interstage temperatures the maximum ratio per stage will normally be in the range of 3.6 to 4.0. That means that most production facilities will have either two- or three-stage compressors.
- A two-stage compressor only allows for one possible intermediate separator operating pressure. A three-stage allows for either one operating at second- or third-stage suction pressure, or two intermediate separators each operating at one of the two compressor intermediate suction pressures.
- Of course, in very large facilities it would be possible to install a separate compressor for each separator and operate as many intermediate pressure separators as is deemed economical.

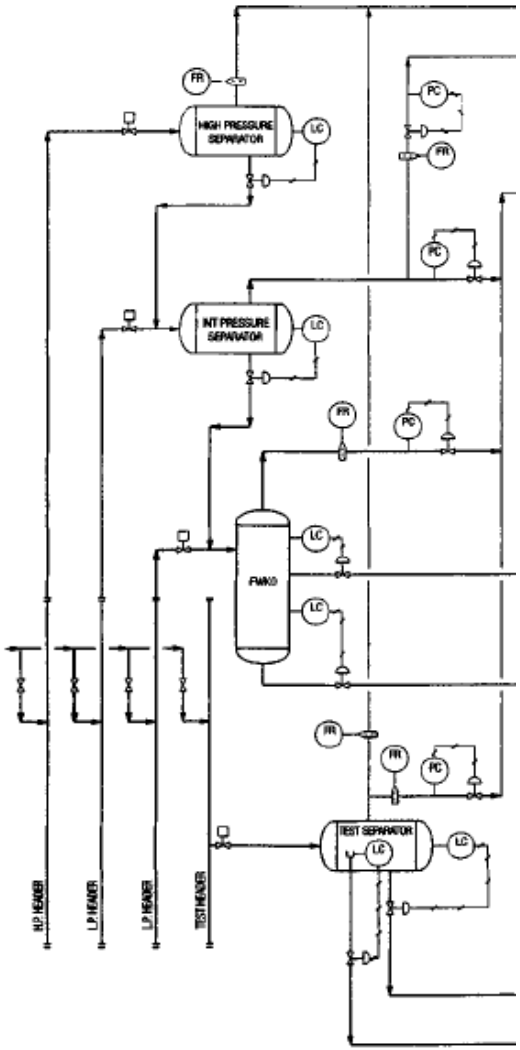

Two phase vs. Three phase separators

: In our example process the high- and intermediate-stage separators are two-phase, while the low-pressure separator is three-phase. This is called a "free water knockout" (FWKO) because it is designed to separate the free water from the oil and emulsion, as well as separate gas from liquid.

: The choice depends on the expected flowing characteristics of the wells. If large amounts of water are expected with the high-pressure wells, it is possible that the size of the other separators could be reduced if the high pressure separator was three-phase.

:This would not normally be the case for a facility such as that shown in Figure 2-1 where individual wells are expected to flow at different FTPs.

: In some instances, where all wells are expected to have similar FTPs at all times, it may be advantageous to remove the free water *early* in the separation scheme.

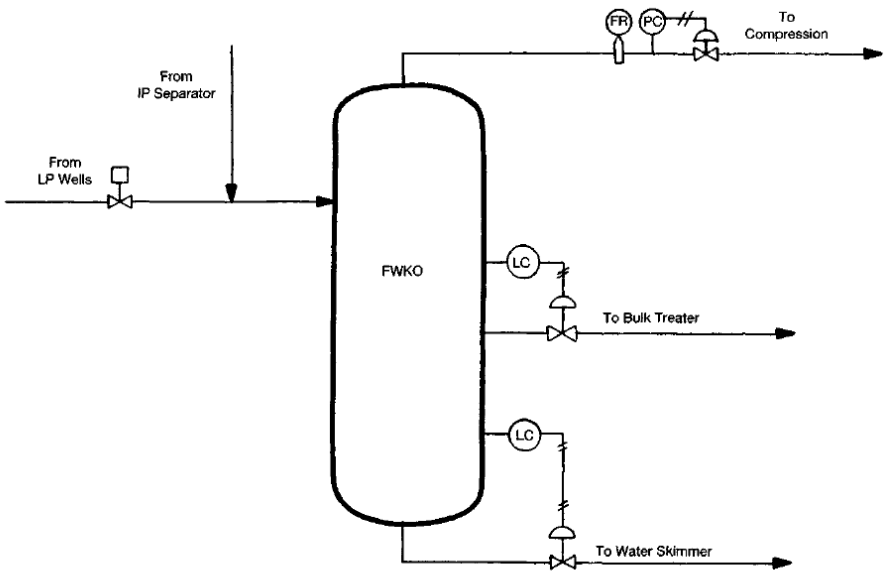

Figure 2-7. Free water knockout.

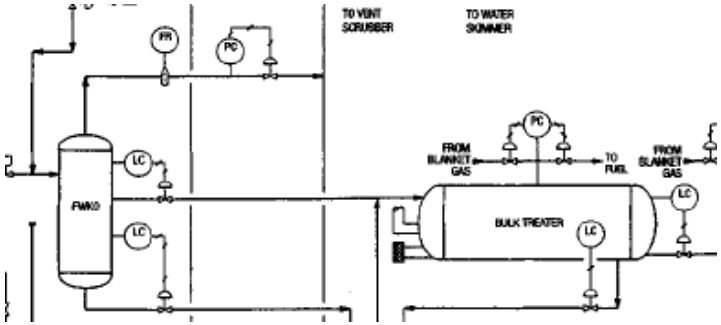

Process flowsheet

: Figure 2-7 is an enlargement of the FWKO of Figure 2-1 A flash calculation is needed to determine the amount of gas and liquid that each separator must handle.

: In the example process of Figure 2-1, the treater is not considered a separate stage of separation as it operates very close to the FWKO pressure, which is the last stage.

: Very little gas will flash between the two vessels. In most instances, this gas will be used for fuel or vented and not compressed for sales, although a small compressor could be added to boost this gas to the main compressor suction pressure.

- Oil treating

  : Most oil treating on offshore facilities is done in vertical or horizontal treaters.

  : Figure 2-8 is an enlargement of the oil treater in Figure 2-1. In this case, a gas blanket is provided to assure that there is always enough pressure in the treater so the water will flow to water treating.

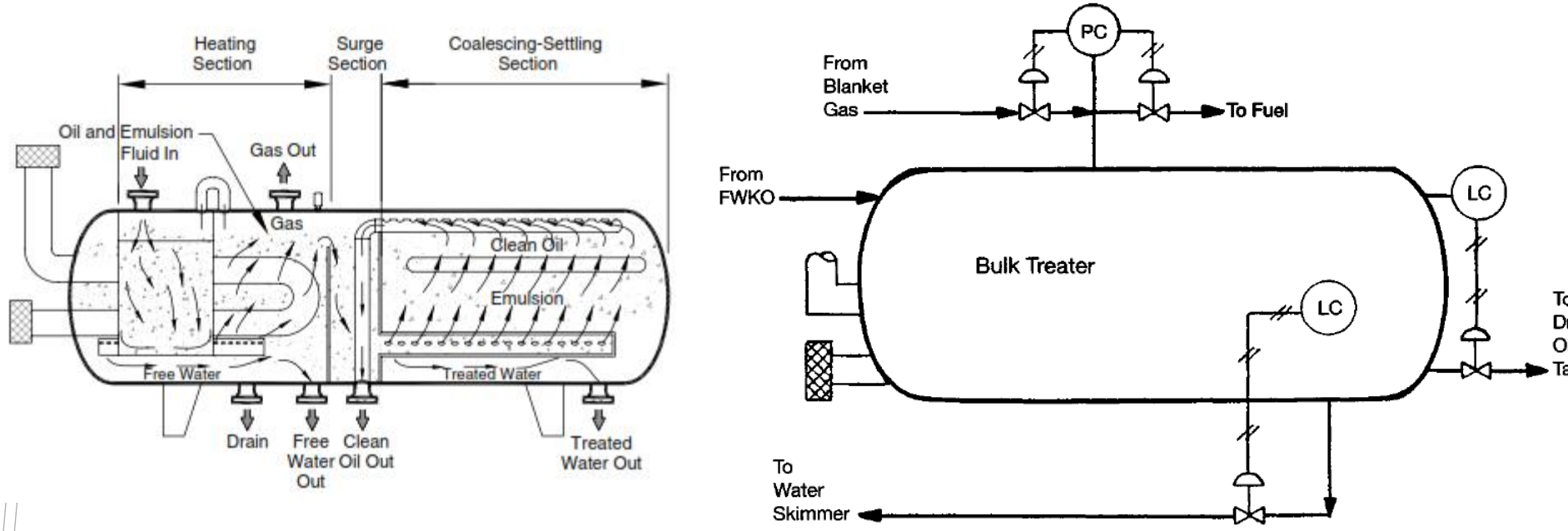

Figure 2-8. Bulk treater.

- At onshore locations the oil may be treated in a big "gunbarrel" (or settling) tank, as shown in Figure 2-9.
- All tanks should have a pressure/vacuum valve with flame arrestor and gas blanket to keep a positive pressure on the system and exclude oxygen. This helps to prevent corrosion, eliminate a potential safety hazard, and conserve some of the hydrocarbon vapors.

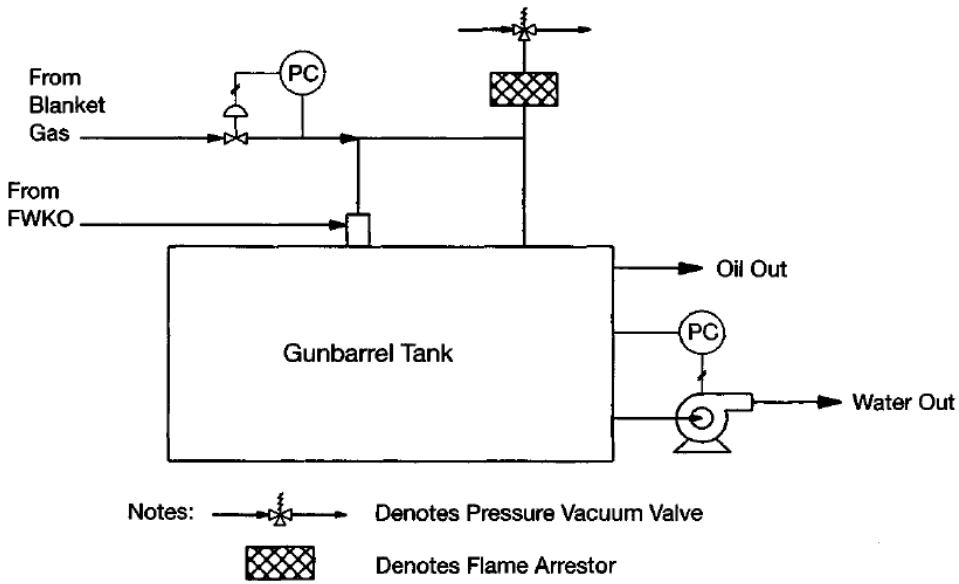

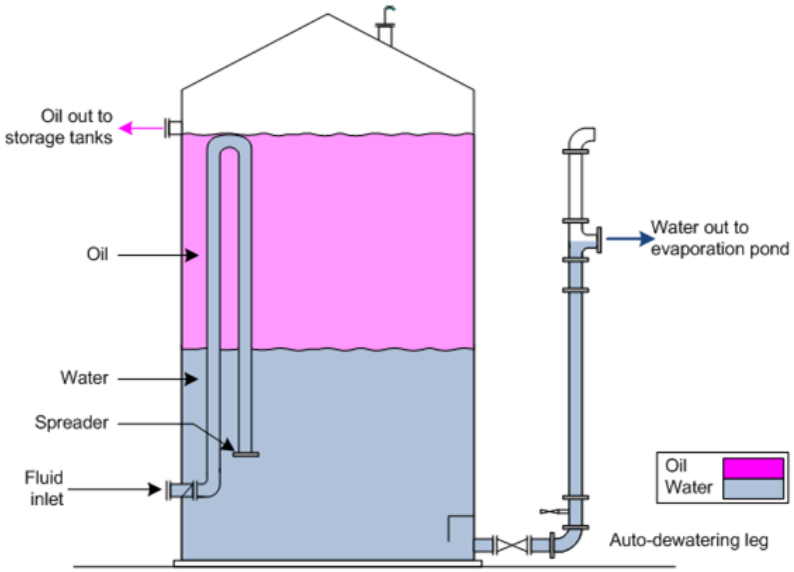

Figure 2-9. "Gunbarrel."

- Figure 2-10 shows a typical pressure/vacuum valve.
- A pressure in the tank lifts a weighted disk or pallet, which allows the gas to escape. If there is a vacuum in the tank because the gas blanket failed to maintain a slight positive pressure, the greater ambient pressure lifts another disk, which allows air to enter. Although we wish to exclude air, it is preferable to allow a small controlled volume into the tank rather than allow the tank to collapse.
- The savings associated with keeping a positive pressure on the tank is

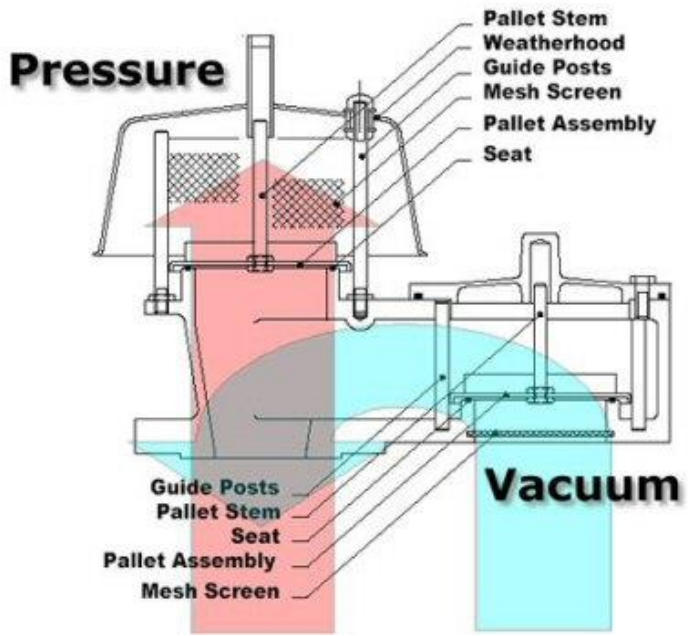

Table 2-3
Tank Breathing Loss

ninal acity bl	Breathing Loss Open Vent bbl/yr	Pressure Valve bbl/yr	Barrels Saved
)00	235	154	81
000	441	297	144
000	625	570	255
000	2,000	1,382	618

Figure 2-10. T t Corp.).

- Figure 2-11 shows a typical flame arrestor. The tubes in the device keep a vent flame from traveling back into the tank.
- Flame arrestors have a tendency to plug with paraffin and thus must be installed where they can be inspected and maintained. Since they can plug, a separate relieving device must always be installed.
- The oil is skimmed off the surface of the gun barrel and the water exits from the bottom either through a water leg or an interface controller and dump valve.
- Flow from the treater or gun barrel goes to a surge tank from which it either flows into a barge or truck or is pumped into a pipeline.

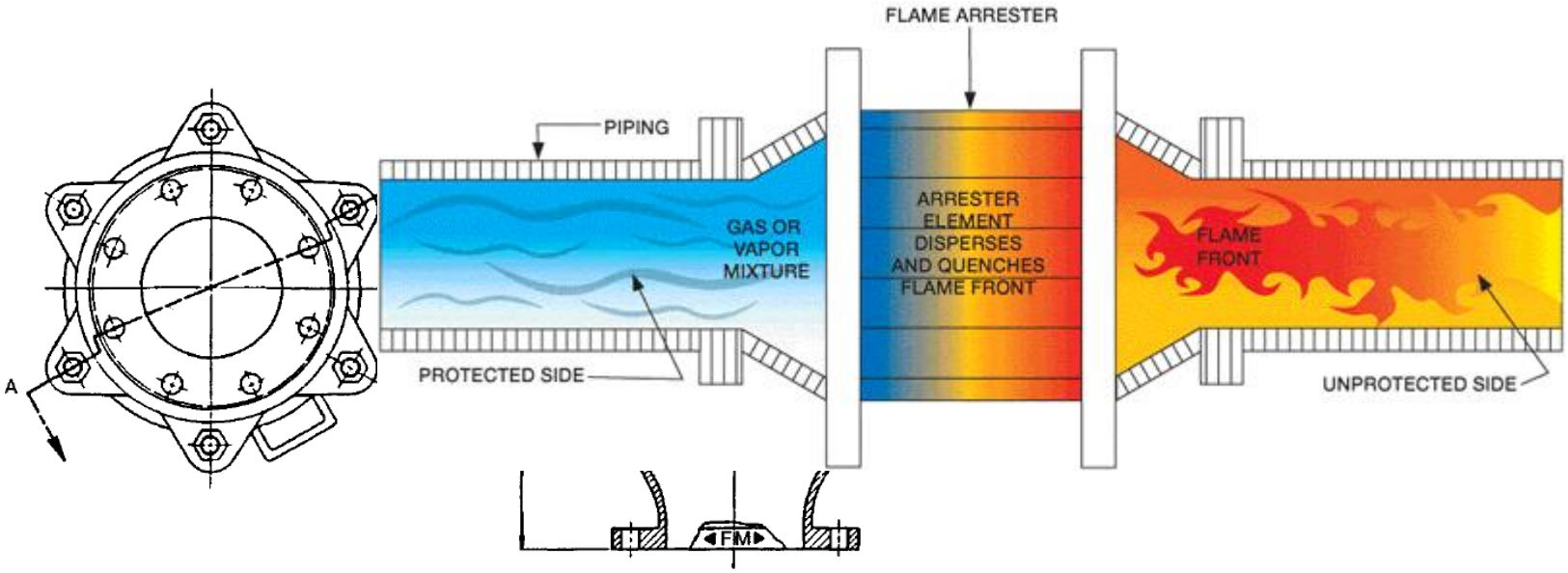

Figure 2-11. Typical flame arrestor (*courtesy of Groth Equipment Corp.*).

- Lease Automatic Custody Transfer (LACT)

  : In large facilities oil is typically sold through a LACT unit, which is designed to meet API Standards and whatever additional measuring and sampling standards are required by the crude purchaser.

  : The value received for the crude will typically depend on its gravity, BS+W content (Basic Sediment + Water), and volume. Therefore, the LACT unit must not only measure the volume accurately, but must continuously monitor the BS+W content and take a sufficiently representative sample so that the gravity and BS+W can be measured.

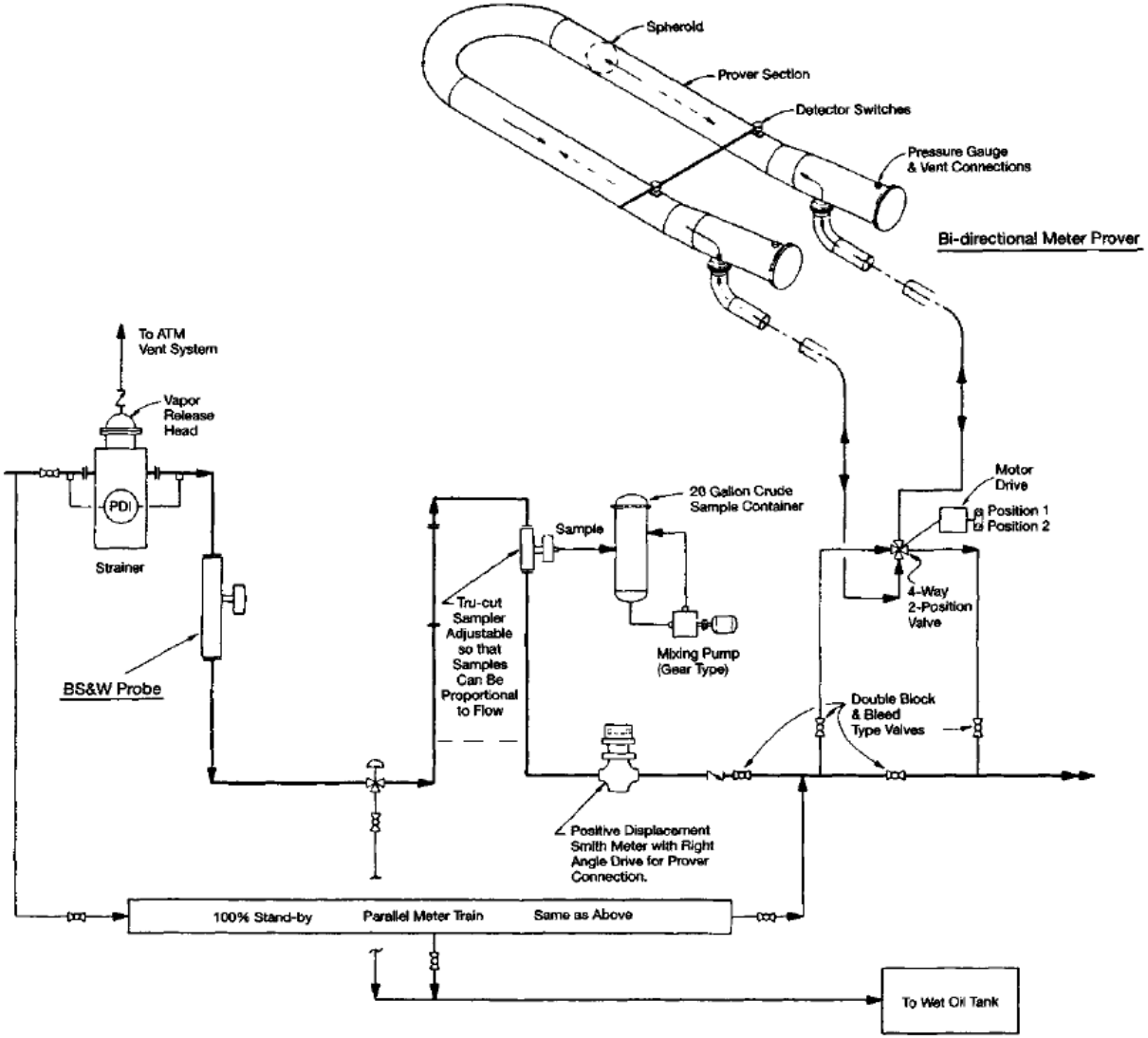

Figure 2-12. Typical LACT unit schematic.

- The crude first flows through a strainer/gas eliminator to protect the meter and to assure that there is no gas in the liquid.
- An automatic BS+W probe is mounted in a vertical run. When BS+W exceeds the sales contract quality this probe automatically actuates the diverter valve, which blocks the liquid from going further in the LACT unit and sends it back to the process for further treating.
- Downstream of the diverter, a sampler in a vertical run takes a calibrated sample that is proportional to the flow and delivers it to a sample container. The sampler receives a signal from the meter to assure that the sample size is always proportional to flow even if the flow varies.
- The sample container has a mixing pump so that the liquid in the container can be mixed and made homogeneous prior to taking a sample of this fluid. It is this small sample that will be used to convert the meter reading for BS+W and gravity.

- The liquid then flows through a positive displacement meter. Most sales contracts require the meter to be proven at least once a month and a new meter factor calculated.
- On large installations a meter prover such as that shown in Figure 2-12 is included as a permanent part of the LACT skid or is brought to the location when a meter must be proven.
- The meter prover contains a known volume between two detector switches. This known volume has been measured in the factory to ±0.02% when measured against a tank that has been calibrated by the National Bureau of Standards.
- On smaller installations, a master meter that has been calibrated using a prover may be brought to the location to run in series with the meter to be proven. In many onshore locations a truck-mounted meter prover is used.
- The sales meter must have a proven repeatability of ±0.02% when calibrated against a master meter or ±0.05% when calibrated against a tank or meter prover.

1. Charge Pump,
2. Inline Strainer with Air Eliminator
3. BS&W Probe and Monitor
4. Automatic Sampling System
5. Three Way Diverting Valve
6. Custody Transfer Meter
7. Prover Connections
8. Back Pressure Control Valve

*The need for proving arises because operating conditions differ significantly from the conditions under which the meter is calibrated.

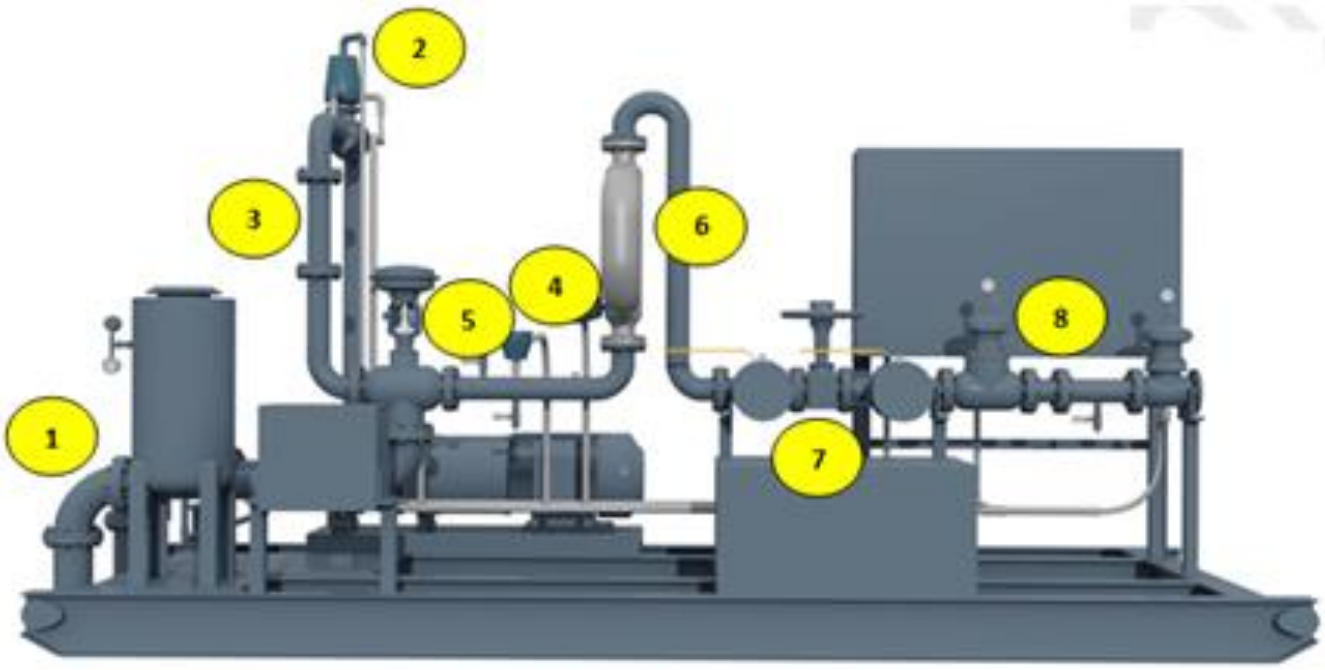

- Pumps

  : Pumps are normally needed to move oil through the LACT unit and deliver it at pressure to a pipeline downstream of the unit. Pumps are sometimes used in water treating and disposal processes.

  : In addition, many small pumps may be required for pumping skimmed oil to higher pressure vessels for treating, glycol heat medium and cooling water service, firefighting, etc.

- Water treating

  : Figure 2-13 shows an enlargement of the water treating system for the example.

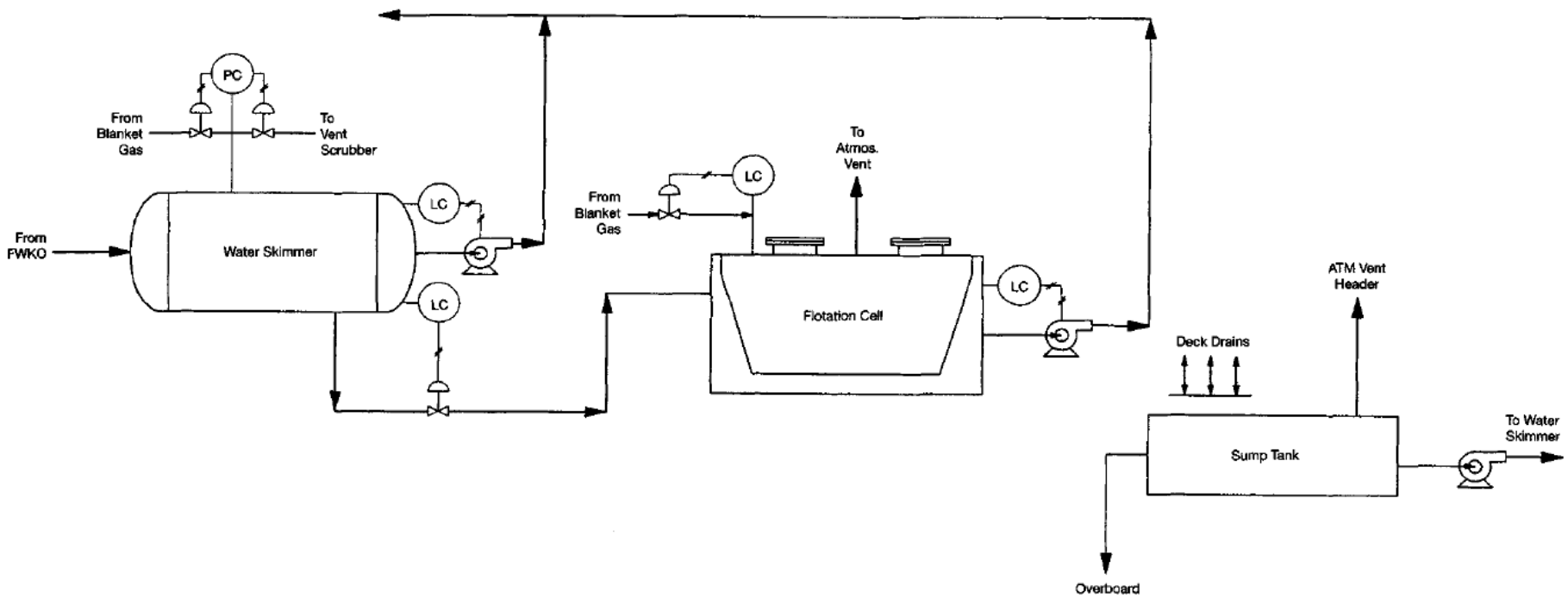

Figure 2-13. Water treating system.

- Compressor

  : Figure 2-14 shows the configuration of the typical three-stage reciprocating compressor in our example flowsheet.

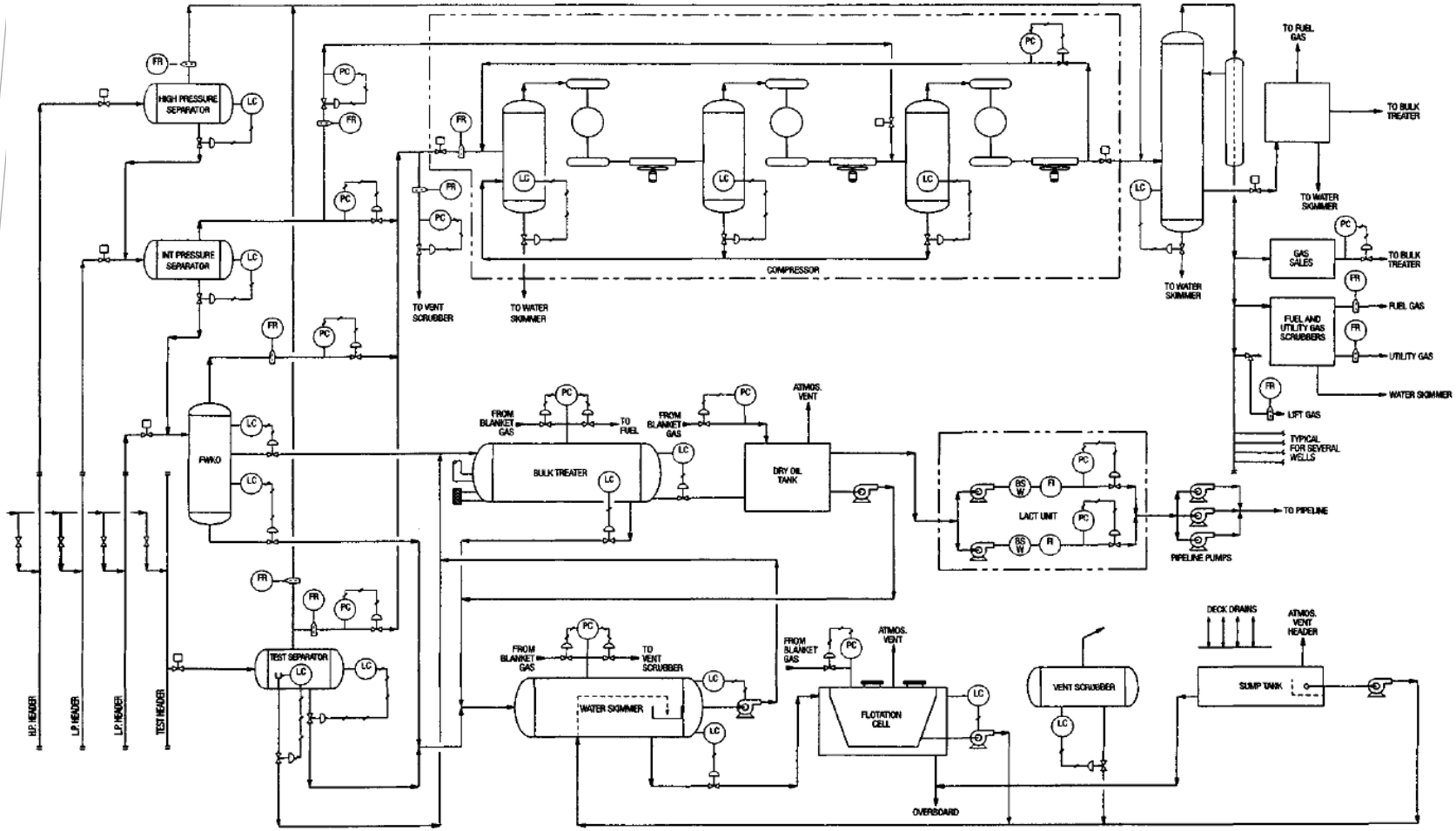

- Gas from the intermediate pressure separator can be routed to either the second-stage or third-stage suction pressure, as conditions in the field change.
- Gulf of Mexico accident records indicate that compressors are the single most hazardous piece of equipment in the process.
- The compressor is equipped with an automatic suction shut-in valve on each inlet and a discharge shut-in valve so that when the unit shuts down, or when an abnormal condition is detected, the shut-in valves actuate to isolate the unit from any new sources of gas.
- Many operators prefer that an automatic blowdown valve also be installed so that as well as isolating the unit, all the gas contained within the unit is vented safely at a remote location.

- Compressors in oil field service should be equipped with a recycle valve and a vent valve.
- The recycle valve allows the compressor to be run at low throughput rates by keeping the compressor loaded with its minimum required throughput. In a reciprocating compressor this is done by maintaining a minimum pressure on the suction. In a centrifugal compressor this is done by a more complex surge control system.
- The vent valve allows production to continue when the compressor shuts down. Many times a compressor will only be down for a short time and it is better to vent the gas rather than automatically shut in production.
- The vent valve also allows the compressor to operate when there is too much gas to the inlet. Under such conditions the pressure will rise to a point that could overload the rods on a reciprocating compressor.
- The two basic types of compressors used in production facilities are reciprocating and centrifugal.

  : Reciprocating compressors are particularly attractive for low horsepower (< 2,000 hp), high-ratio applications.

  : Centrifugal compressors are particularly well suited for high horsepower (>4,000 hp) or for low ratio (<2.5) in the 1,000 hp and greater sizes.

- Gas dehydrators

  : Removing most of the water vapor from the gas is required by most gas sales contracts, because it prevents hydrates from forming and prevents water vapor from condensing and creating a corrosion problem. Dehydration also increases line capacity marginally.

  : Most sales contracts in the southern United States call for reducing the water content in the gas to less than 7 lb/MMscf. In colder climates, sales requirements of 3 to 5 lb/MMscf are common.

- Dehydration method
  1. Cool to the hydrate formation level and separate the water that forms. This can only be done where high water contents (±30 lb/MMscfd) are acceptable.
  2. Use a Low-temperature Exchange (LTX) unit designed to melt the hydrates as they are formed. Figure 2-15 shows the process. LTX units require inlet pressures greater than 2,500 psi to work effectively. Although they were common in the past, they are not normally used because of their tendency to freeze and their inability to operate at lower inlet pressure as the well FTP declines.
  3. Contact the gas with a solid bed of CaCl2. The CaCl2 will reduce the moisture to low levels, but it cannot be regenerated and is very corrosive.
  4. Use a solid desiccant, such as activated alumina, silica gel or molecular sieve, which can be regenerated. These are relatively expensive units, but they can get the moisture content to very low levels. Therefore, they tend to be used on the inlets to low temperature gas processing plants, but are not common in production facilities.

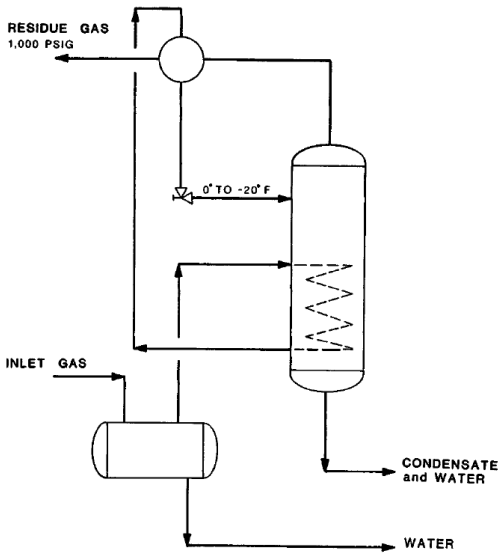

Figure 2-15. Low-temperature exchange unit.

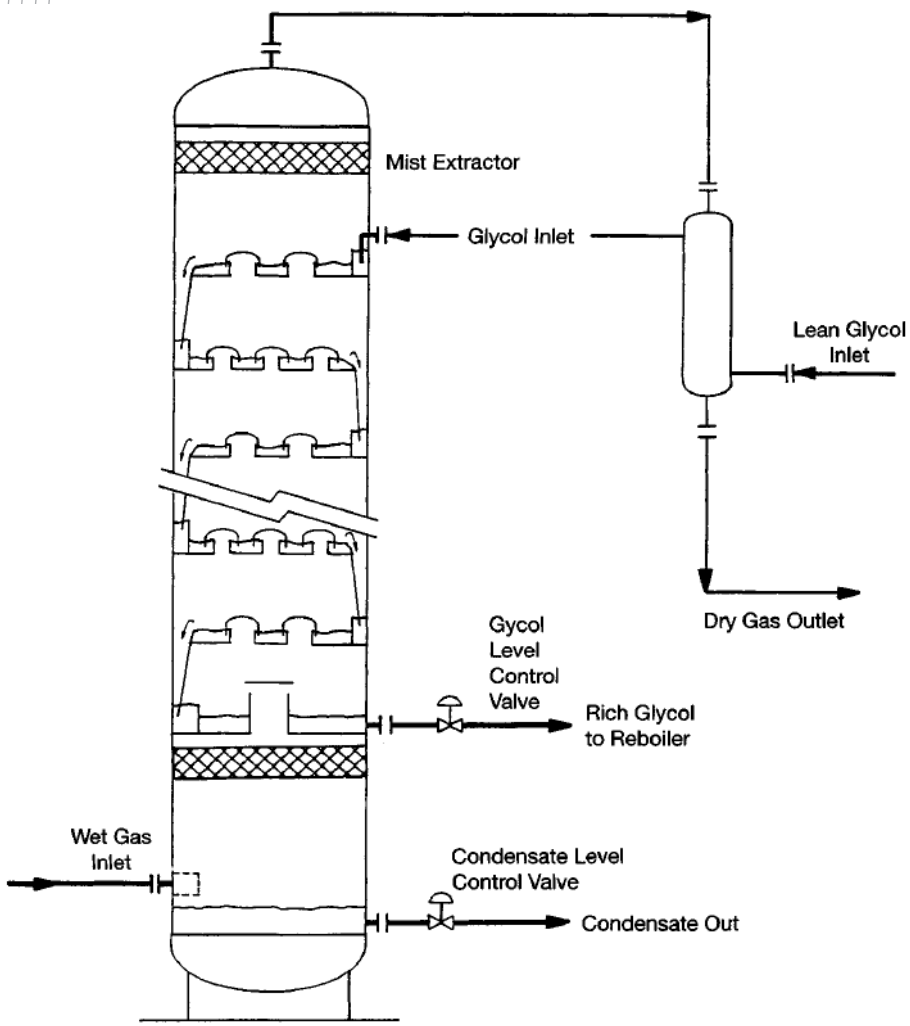

Figure 2-16. Typical glycol contact tower.

- Figure 2-16 shows how a typical bubble-cap glycol contact tower works.
- Wet gas enters the base of the tower and flows upward through the bubble caps. Dry glycol enters the top of the tower.
- Because of the downcomer wier on the edge of each tray, flows across the tray and down to the next.
- There are typically six to eight trays in most applications. The bubble caps assure that the upward flowing gas is dispersed into small bubbles to maximize its contact area with the glycol.

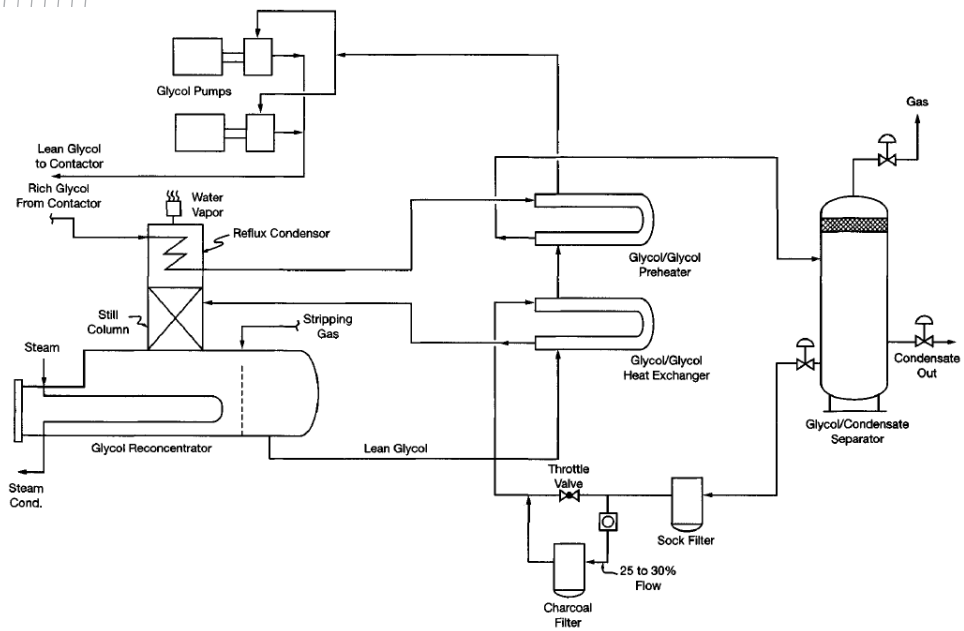

Figure 2-17. Typical glycol reconcentrator.

- Before entering the contactor the dry glycol is cooled by the outlet gas to minimize vapor losses when it enters the tower.
- The wet glycol (Rich glycol) leaves from the base of the tower and flows to the reconcentrator (reboiler) by way of heat exchangers, a gas separator, and filters, as shown in Figure 2-17.
- In the reboiler the glycol is heated to a sufficiently high temperature to drive off the water as steam. The dry glycol is then pumped back to the contact tower.
- Most glycol dehydrators use triethylene glycol, which can be heated to 340 ^{o}F (171 ^{o}C) to 400 ^{o}F (204 ^{o}C) in the reconcentrator and work with gas temperatures up to 120 ^{o}F (49 ^{o}C).

Well Testing

- It is necessary to keep track of the gas, oil, and water production from each well to be able to 1) manage the reserves properly, 2) evaluate where further reserve potential may be found, and 3) diagnose well problems as quickly as possible.
- Proper allocation of income also requires knowledge of daily production rates.
- It is sometimes more convenient to enable each well to flow through the manifold to one or more test subsystems on a periodic basis. Total production from the facility is then allocated back to the individual wells on the basis of these well tests.
- Most oil wells should be tested at least twice a month for four to twelve hours. Gas wells should be tested at least once a month. One test system can handle approximately 20 oil wells.
- In order to obtain a valid test, the test system should operate at the same pressure as the system to which the well normally flows. In our example facility, Figure 2-1, we must either install separate high-, intermediate- and low-pressure test systems, or we must arrange the gas backpressure valves on the first vessel in the test system so that the vessel can operate at any of the three pressures by just switching a valve.

- A three-phase separator could be used where oil/water emulsions are not considered severe. The amount of oil in the water outlet is insignificant and can be neglected. The water in the oil outlet can be determined from a net oil computer, which automatically corrects for the water, or by taking a sample and measuring its oil content. (well suited for gas well)
- A vertical treater could be used where it was considered necessary to heat the emulsion in order to measure its water content. → Low-pressure vessels with limited gas and free water capacity. (low pressure oil well)
- including a three-phase separator upstream of and in series with the treater. (high pressure oil well or large free water)

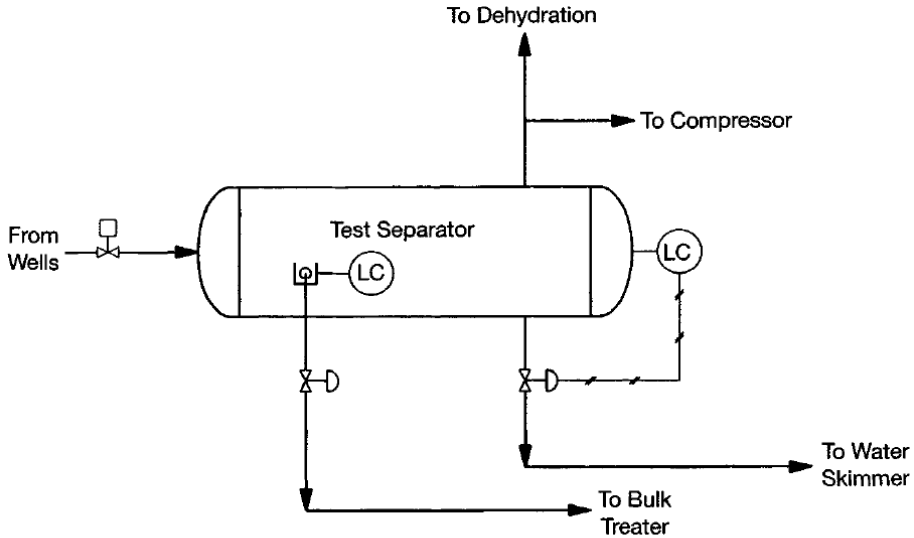

Figure 2-18. Well test system.

Gas lift

- High-pressure gas is injected into the well to lighten the column of fluid and allow the reservoir pressure to force the fluid to the surface.
- The separator must have sufficient gas separation capacity to handle gas lift as well as formation gas. The injection of gas may increase wellhead pressure.

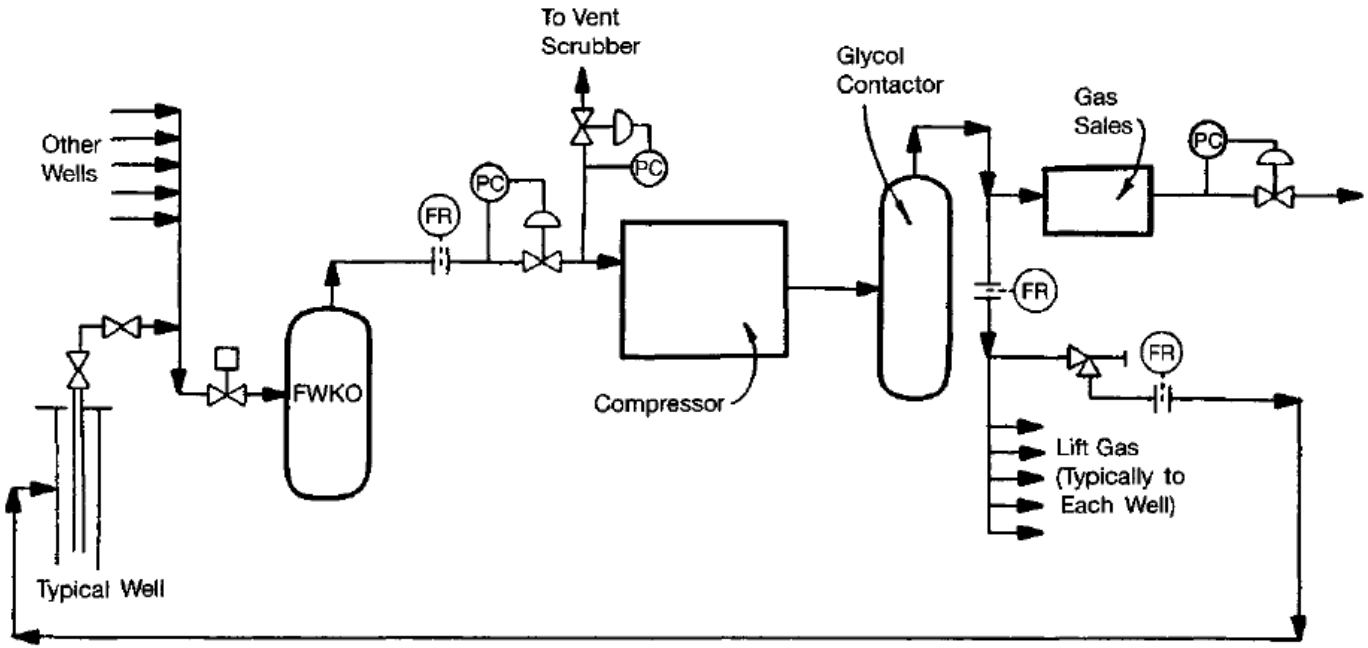

Figure 2-19. Gas lift system.

- If gas lift is to be used, it is even more important from a production standpoint that the low-pressure separator be operated at the lowest practical pressure.
- It can be seen that a one psi change in well backpressure will cause between 2 and 6 BFPD change in well deliverability.

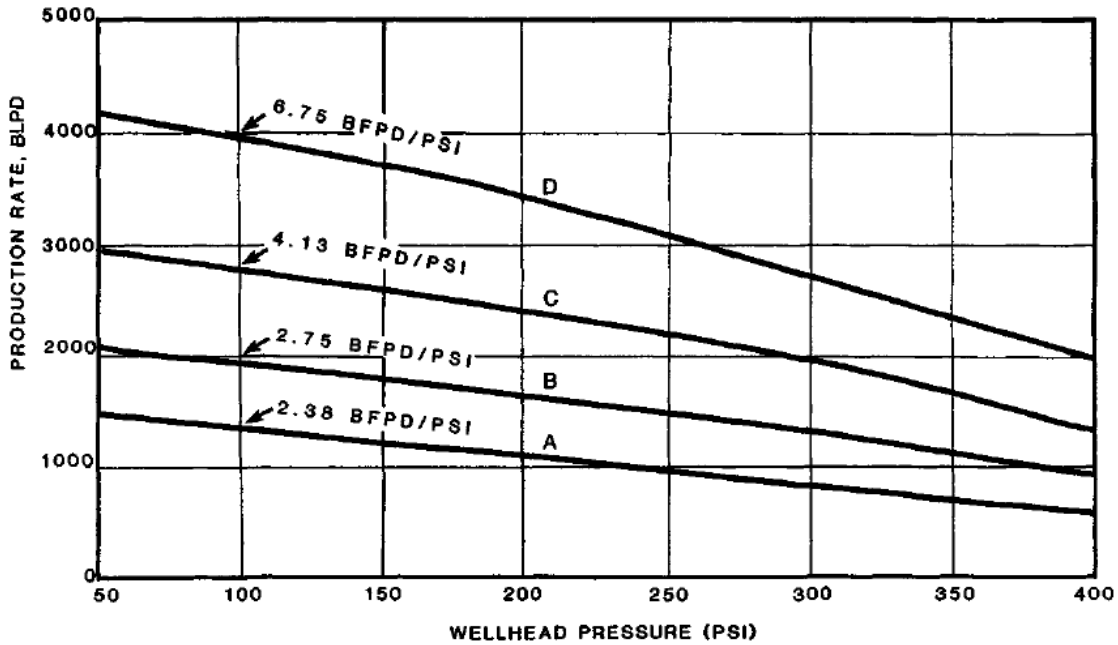

Note: These curves are for a specific set of tubing size, casing pressure, and fluid out.

Figure 2-20. Effect of wellhead backpressure on total fluid production rate for a specific set of wells.

- For a typical well, the higher the injection pressure the higher the flowrate.
- The gas process used to be designed to deliver the sales gas in the 1,000 to 1,200 psi range. At about this range a rather large change in gas injection pressure is necessary for a small change in well deliverability.
- In the range of pressures under consideration (approximately 65-psia suction, 1,215-psia discharge) a 1-psi change in suction pressure (i.e., low-pressure separation operating pressure) is equivalent to a 19-psi change in discharge pressure (i.e., gas lift injection pressure) as it affects compressor ratio and thus compressor horsepower requirements.

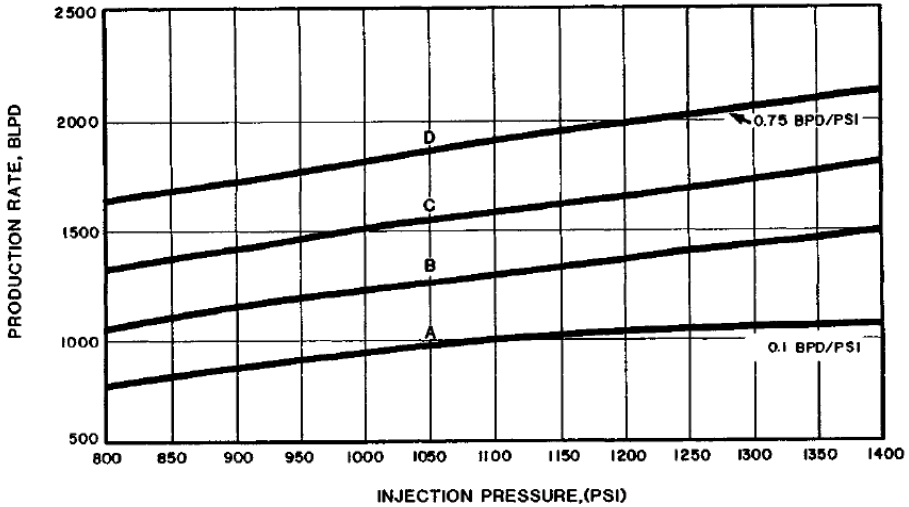

Note: These curves are for a specific set of tubing size, casing pressure, and fluid out.

Figure 2-21. Effect of gas lift injection pressure on total fluid production rate for a specific set of wells.

- A comparison of Figures 2-20 and 2-21 shows that a 1-psi lowering of suction pressure (low pressure separator) in this typical case is more beneficial than a 19-psi increase in discharge pressure for the wells with a low productivity index (PI) but not as beneficial for the high PI wells.
- Figure 2-22 shows the effect of gas injection rate. As more gas is injected, the weight of fluid in the tubing decreases and the bottomhole flowing pressure decreases.

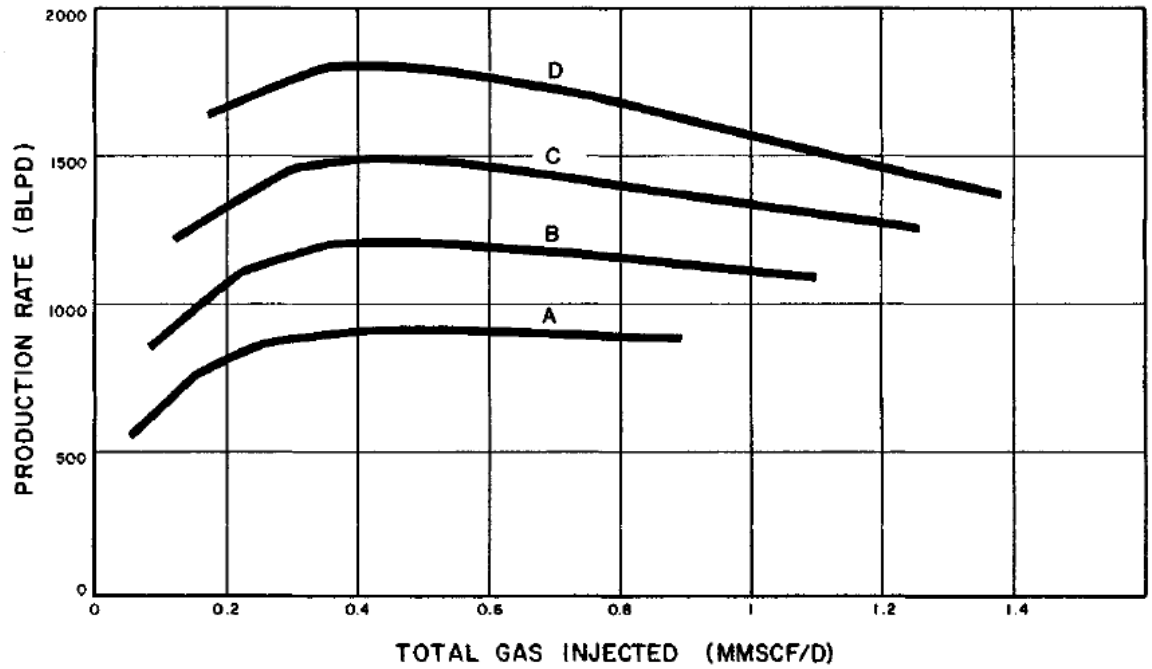

Figure 2-22. Effect of gas lift injection rate on total fluid production rate for a specific set of wells.

- This is balanced by the friction drop in the tubing. As more gas lift gas is injected, the friction drop of the mixture returning to the surface increases exponentially.
- At some point the friction drop effect is greater than the effect of lowering fluid column weight. At this point, injecting greater volumes of gas lift gas causes the bottomhole pressure to increase and thus the production rate to decrease.
- Each gas lift system must be evaluated for its best combination of injection rate, separator pressure, and injection pressure, taking into account process restraints (e.g., need to move the liquid through the process) and the sales gas pressure.
- In the vast majority of cases, a low pressure separator pressure of about 50 psig and a gas lift injection pressure of 1,000 to 1,400 psig will prove to be near optimum.

Offshore Platform Consideration

- Modular construction

  : Modules are large boxes of equipment installed in place and weighing from 300 to 2,000 tons each.

  : Modules are constructed, piped, wired and tested in shipyards or in fabrication yards, then transported on barges and set on the platform, where the interconnections are made

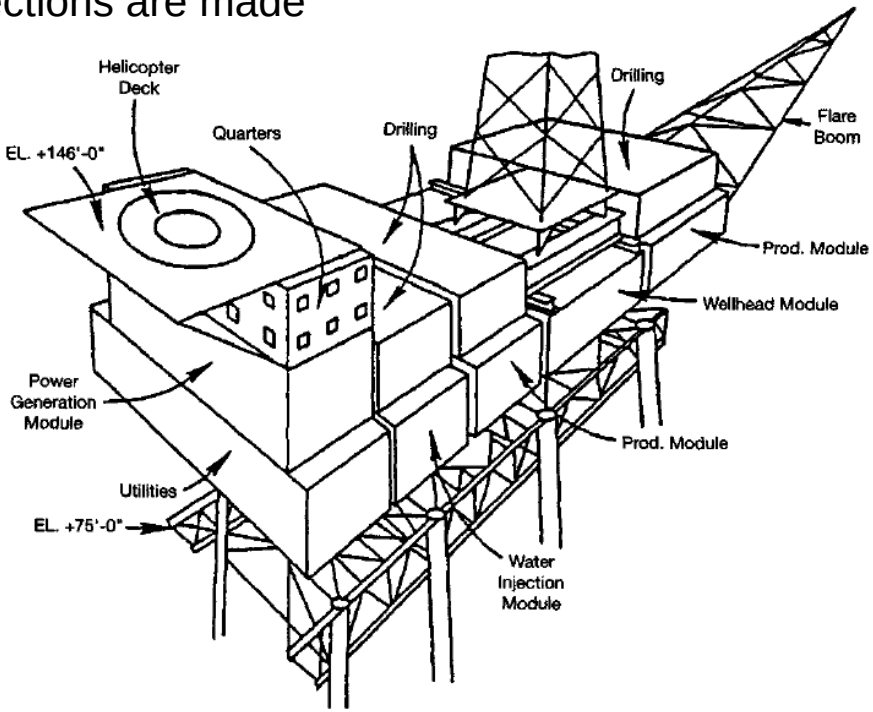

Figure 2-23. Schematic of a large offshore platform, illustrating the concept of modularization.

- Equipment arrangement

  : The equipment arrangement plan shows the layout of all major equipment.

  : The right-hand module contains the flare drums, water skimmer tank and some storage vessels. In addition, it provides support for the flare boom.

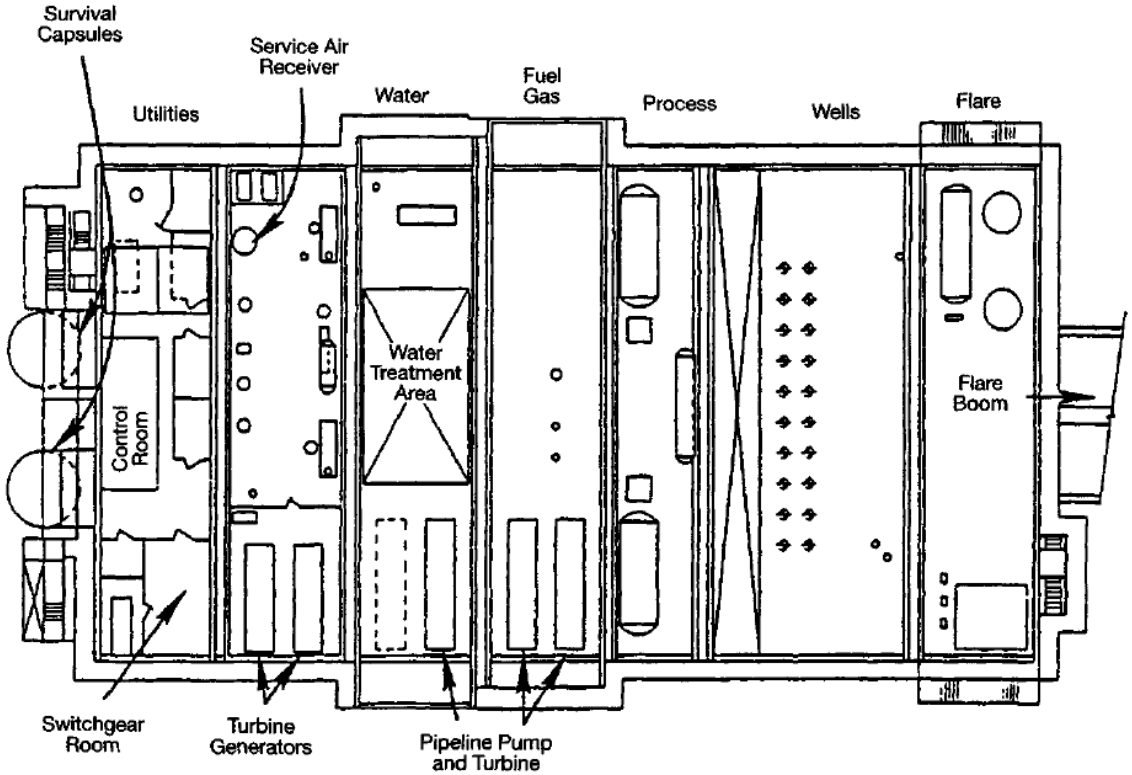

Figure 2-24. Equipment arrangement plan of a typical offshore platform illustrating the layout of the lower deck.

- The adjacent wellhead module consists of a drilling template with conductors through which the wells will be drilled.
- The third unit from the right contains the process module, which houses the se
- Th , fuel ga
- Th co d ba
- Th

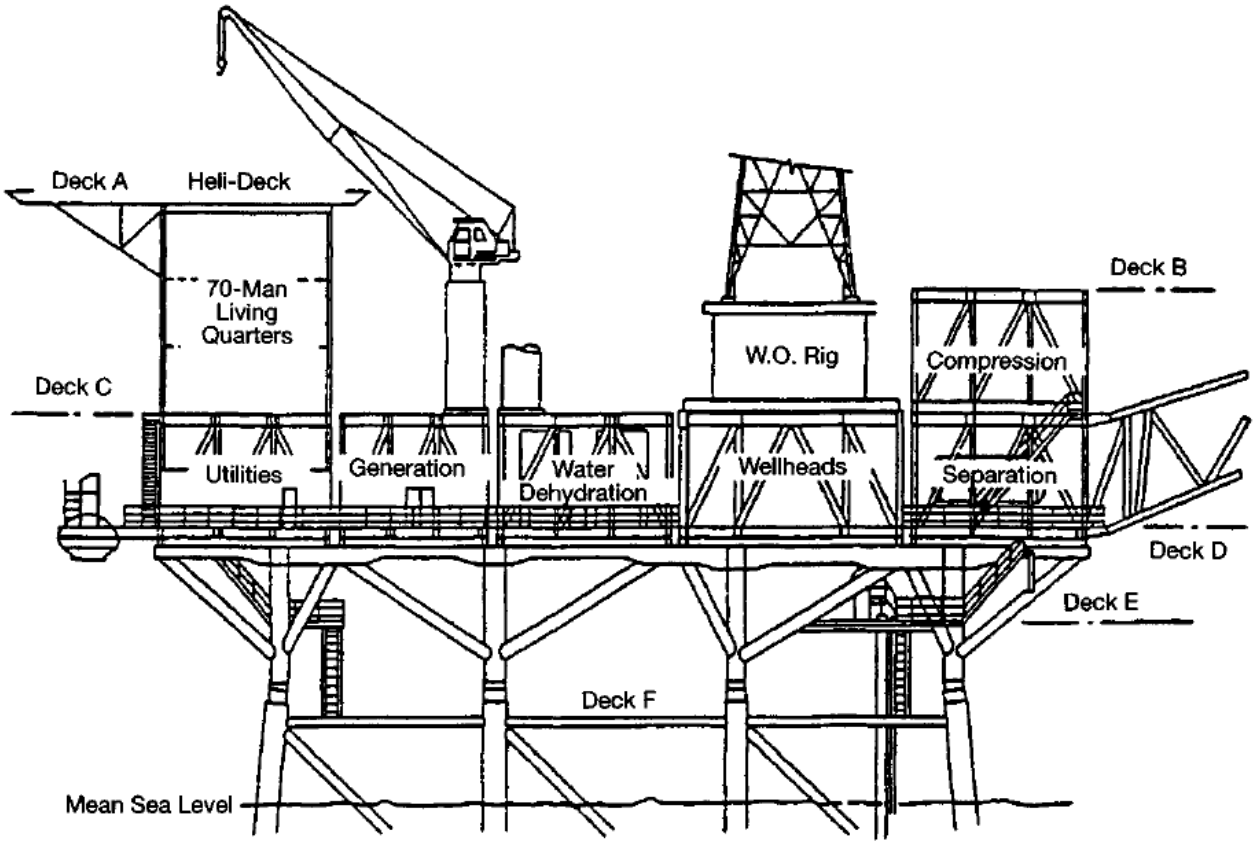

Figure 2-25. Typical elevation view of an offshore platform showing the relationships among the major equipment modules.

Thank you, Question?