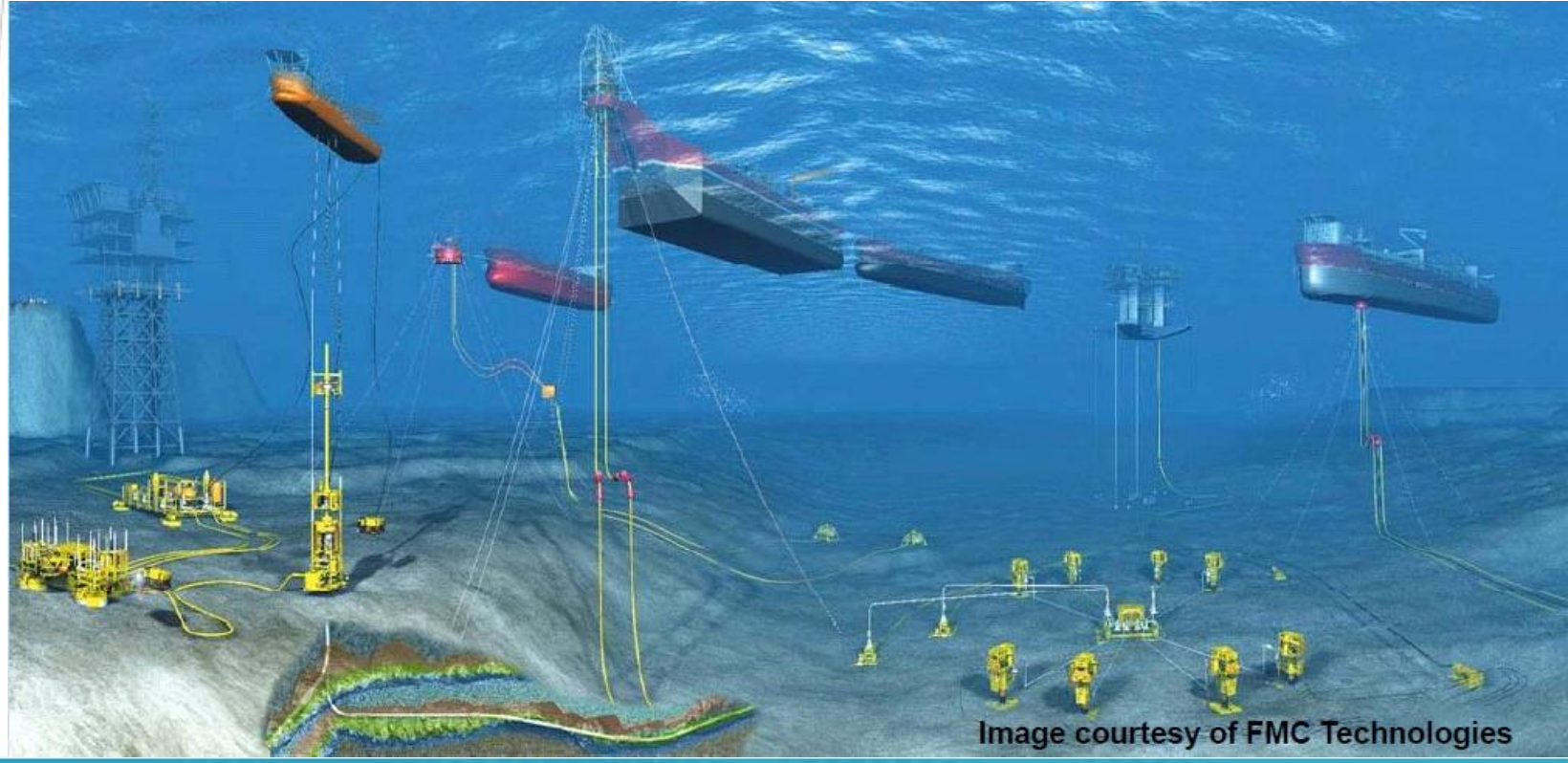

Offshore Equipment

Yutaek Seo

Offshore platform topside

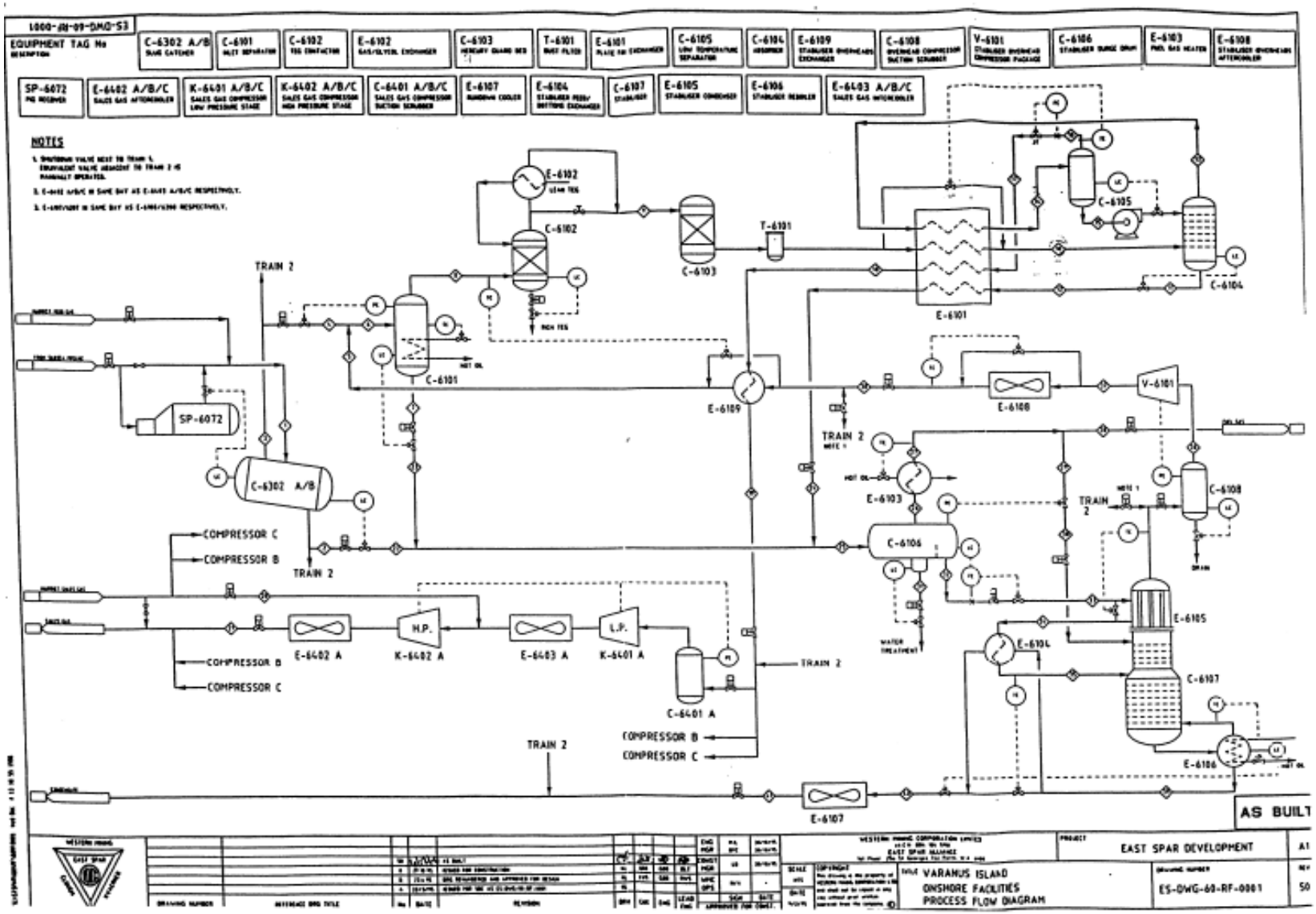

Table 15-1

Table 15-1
Example Index of Pipe, Valves, and Fittings

Table	Service	Pressure Rating Classification
A	Non-corrosive Hydrocarbons and Glycol	150 lb ANSI
B	Non-corrosive Hydrocarbons and Glycol	300 lb ANSI
C	Non-corrosive Hydrocarbons and Glycol	400 lb ANSI
D	Non-corrosive Hydrocarbons and Glycol	600 lb ANSI
E	Non-corrosive Hydrocarbons and Glycol	900 lb ANSI
F	Non-corrosive Hydrocarbons and Glycol	1500 lb ANSI
G	Non-corrosive Hydrocarbons and Glycol	2500 lb ANSI
H	Non-corrosive Hydrocarbons	API 2000 psi
I	Non-corrosive Hydrocarbons	API 3000 psi
J	Non-corrosive Hydrocarbons	API 5000 psi
K	Non-corrosive Hydrocarbons	API 10000 psi
L	Air	150 lb ANSI
M	Water	125 lb Cast Iron
N	Steam and Steam Condensate	300 lb ANSI
O	Drains and Sewers	Atmospheric
P (Spare)		
Q (Spare)		
R (Spare)		
SV	Valves for Corrosive Service	General
AA	Corrosive Hydrocarbons	150 lb ANSI
BB	Corrosive Hydrocarbons	300 lb ANSI
CC (Not Prepared)	Corrosive Hydrocarbons	400 lb ANSI
DD	Corrosive Hydrocarbons	600 lb ANSI
EE	Corrosive Hydrocarbons	900 lb ANSI
FF	Corrosive Hydrocarbons	1500 lb ANSI
GG	Corrosive Hydrocarbons	2500 lb ANSI

Table 15-2

Table 15-2
Example Specifications of Pipe, Valves, and Fittings

150-lb ANSI
Non-corrosive service[1]
Temperature range: –20 to 650°F
Maximum pressure: Depends on flange rating[2] at service temperature

Size Ranges	General Specifications	Platform Service
Pipe	Grade depends on service	ASTM A106, Grade B, Seamless[3]
¾-in. and smaller nipples	threaded and coupled	Schedule 160 or XXH
1½-in. and smaller pipe	threaded and coupled	Schedule 80 min
2-in.–3-in. pipe	beveled end	Schedule 80 min
4-in. and larger pipe	beveled end	See Table 2-4
Valves (Do not use for temperatures above maximum indicated.)		
Ball		
½-in. and smaller	1500 lb CWP ANSI 316 SS screwed, regular port, wrench operated, Teflon seat	Manufacturer's Figure No. _____ (300°F)
¾-in.–1½-in.	1500 lb CWP, CS, screwed, regular port, wrench operated, Teflon seat	Manufacturer's Figure No. _____ or Figure No. _____ (450°F)
2-in.–8-in.	150 lb ANSI CS RF flanged, regular port, lever or hand wheel operated, trunnion mounted	Etc.
10-in. and larger	150 lb ANSI CS RF flanged, regular port, gear operated, trunnion mounted	Etc.
Gate		
½-in. and smaller	2000 lb CWP, screwed, bolted bonnet, AISI 316 SS	Etc.
¾-in.–1½-in.	2000 lb CWP, screwed, bolted bonnet, forged steel	Etc.
2-in–12-in.	150 lb ANSI CS RF flanged, standard trim, hand wheel or lever operated	Etc.

Table 15-2 (Continued)
Example Specifications of Pipe, Valves, and Fittings

Globe		
1½-in. and smaller (Hydrocarbons)	2000 lb CWP CS screwed	Etc.
1½-in. and smaller (Glycol)	2000 lb CWP CS socketweld	Etc.
2-in. and larger	150 lb ANSI CS RF flanged, handwheel operated	Etc.
Check		
1½-in. and smaller	600 lb ANSI FS screwed, bolted bonnet[4], standard trim	Etc.
2-in. and larger	150 lb ANSI CS RF flanged, bolted bonnet[4], swing check, standard trim	Etc.
Reciprocating Compressor Discharge	300 lb ANSI CS RF flanged, piston, check, bolted bonnet[4]	Etc.
Lubricated Plug		
1½-in.–6-in.	150 lb ANSI CS RF flanged, bolted bonnet	Etc.
Non-lubricated Plug		
1½-in.–6-in.	150 lb ANSI CS RF flanged. bolted bpmmet	Etc.
Compressor Laterals	Use ball valves	
Needle		
¼-in.–½-in.	6000 lb CWP, bar stock screwed, AISI 316 SS	Etc.
Fittings		
Ells and Tees		
¾-in. and smaller	6000 lb FS screwed	ASTM A105
1-in.–1½-in.	3000 lb FS screwed	ASTM A105
2-in. and larger	Butt weld, seamless, wall to match pipe	ASTM A234, Grade WPB
Unions		
¾-in. and smaller	6000 lb FS screwed, ground joint, steel to steel seat	ASTM A105
1-in.–1½-in.	3000 lb FS screwed, ground joint, steel to steel seat	ASTM A105
2-in. and larger	Use flanges	

Table 15-2 (Continu
Example Specifications of Pipe, Va

Couplings	
1-in. and smaller	6000 lb FS screwed
1½-in.	3000 lb FS screwed
Plugs	
1½-in. and smaller	Solid bar stock, forged steel
2-in. and larger	X-Strong seamless, weld cap
Screwed Reducers	
¾-in. and smaller	Sch. 160 seamless
1-in–1½-in.	Sch. 80 seamless
Flanges	
1½-in. and smaller	150 lb ANSI FS RF screwed
2-in. and larger	150 lb ANSI FS RF weld neck, bored to pipe schedule
Bolting	
Studs	Class 2 fit, threaded over length
Nuts	Class 2 fit, heavy hexagon, semi-finish
Gaskets	Spiral wound asbestos
Thread Lubricant	Conform to API Bulletin 5A2

Ball Valve

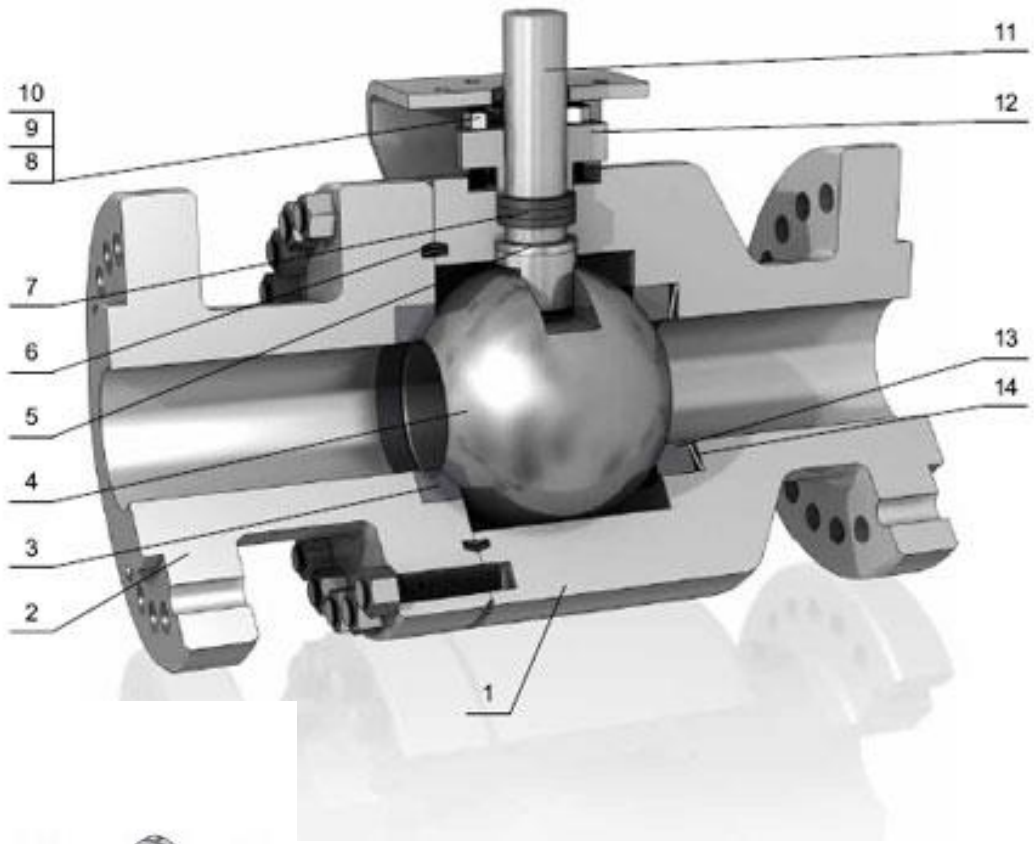

Item	Description
1	Body
2	Bonnet
3	Seat
4	Ball
5	Thrust washer
6	Seal
7	Packing
8	Stud
9	Nut
10	Live loading
11	Stem
12	Gland
13	Upstream seat
14	Belleville spring

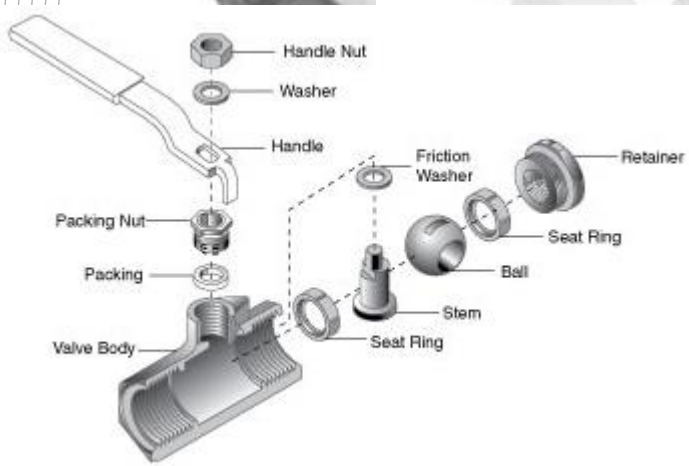

(Courtesy of Cameron Iron Works, Inc.)

Plug valve

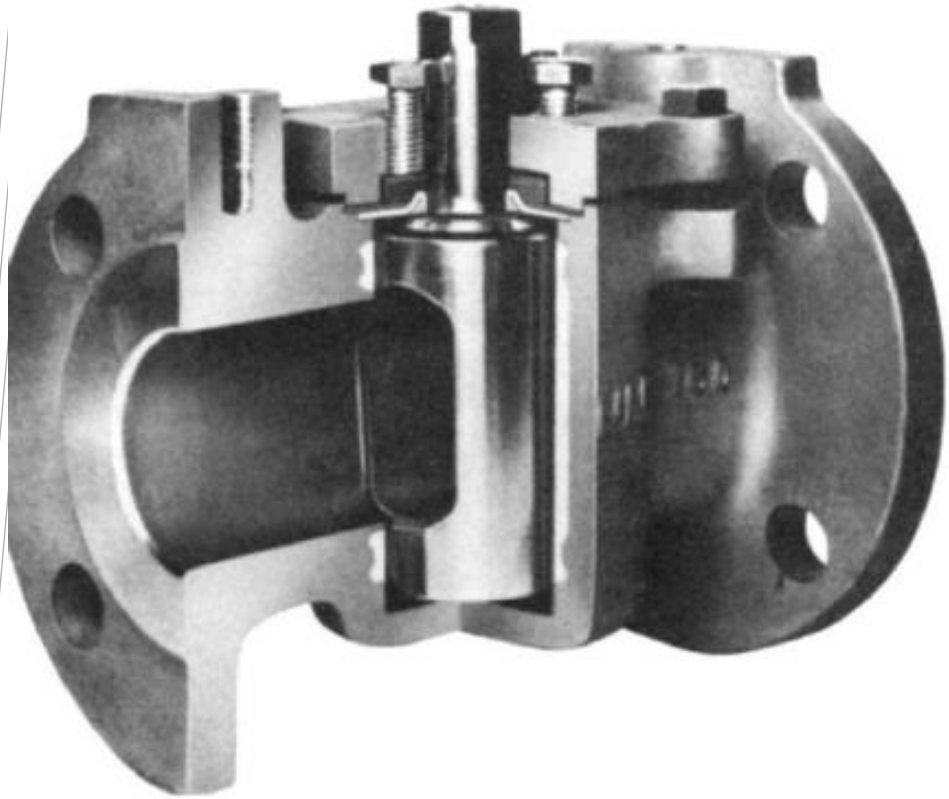

Figure 15-2. Cutaway of plug valve. (*Courtesy of Xomox Corp.*)

Gate valve

Figure 15-3. Cutaway view of gate valve. (*Courtesy of WKM.*)

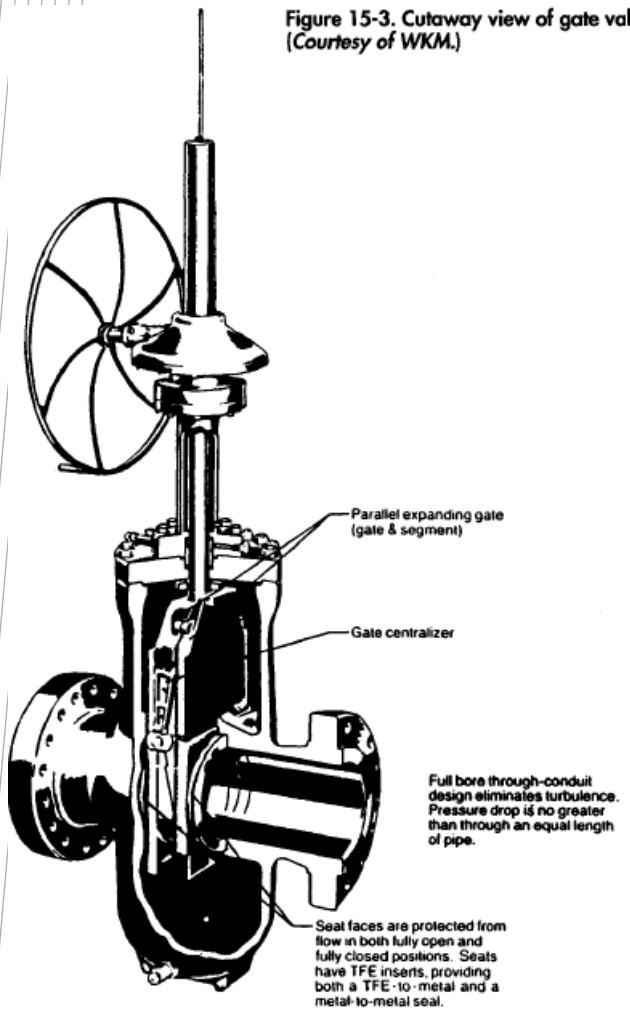

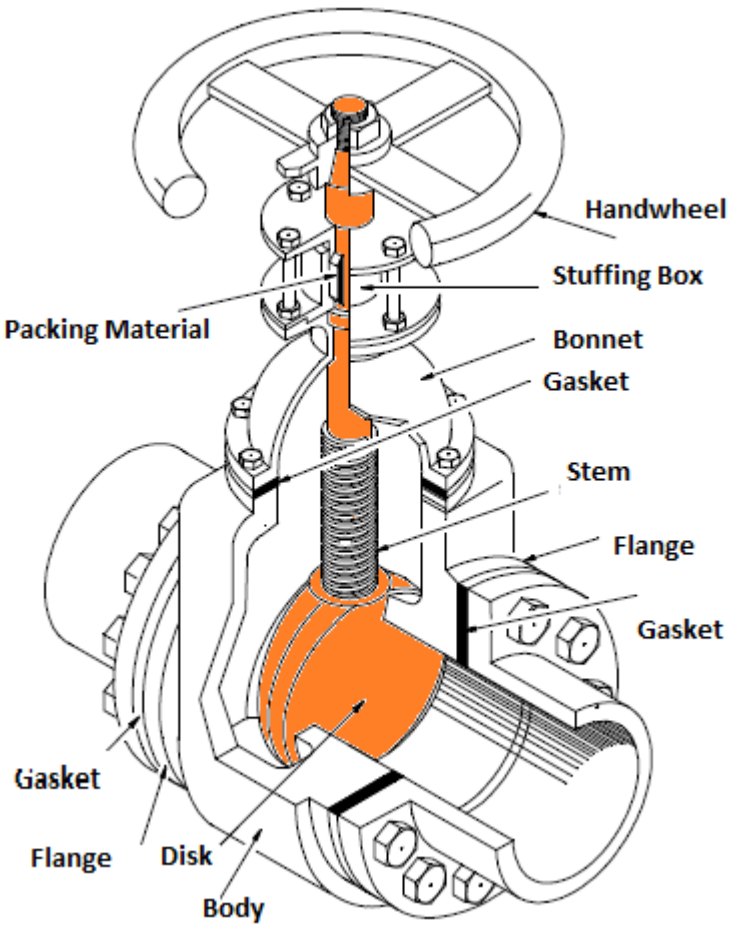

Butterfly valve

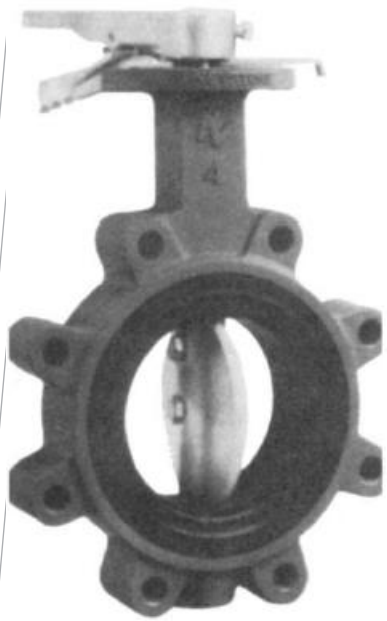

Figure 15-4. Butterfly valve. (*Courtesy of Keystone Valve USA, Inc.*)

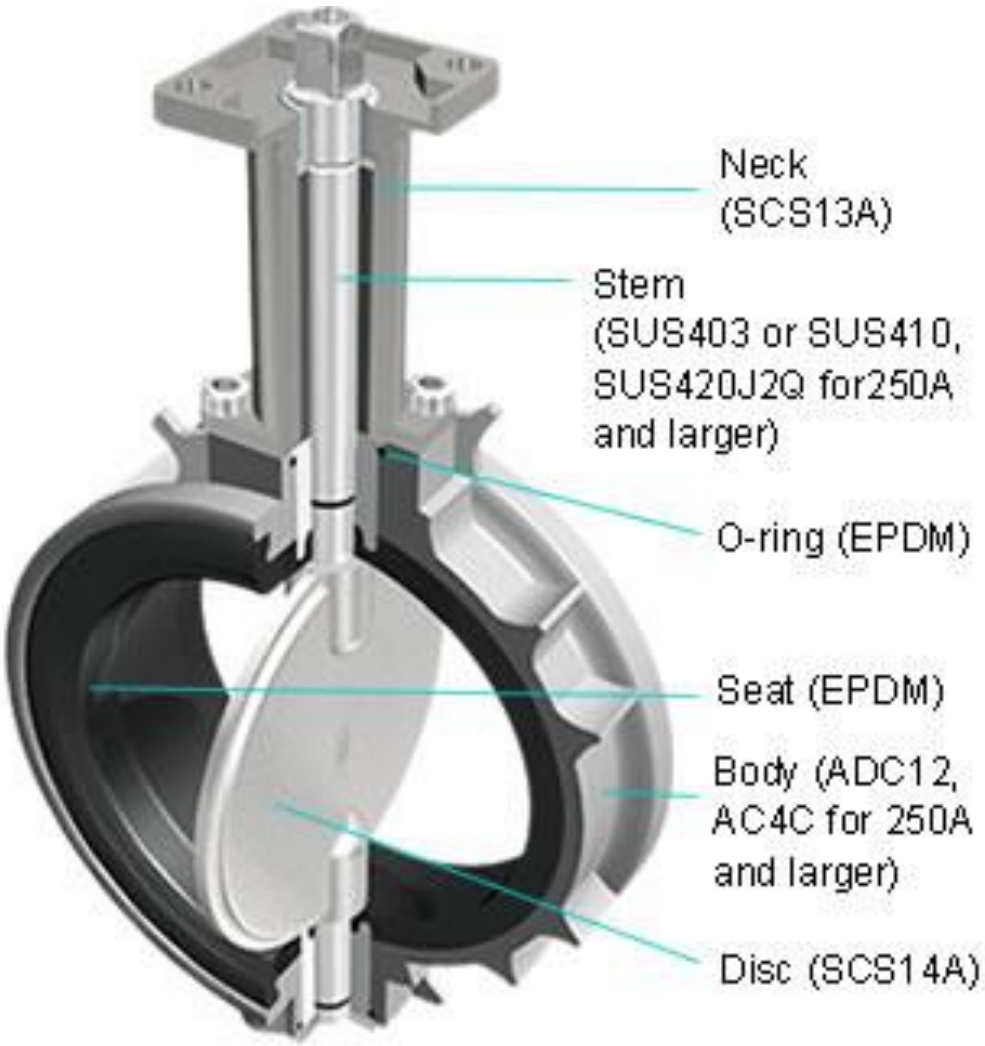

Globe valve

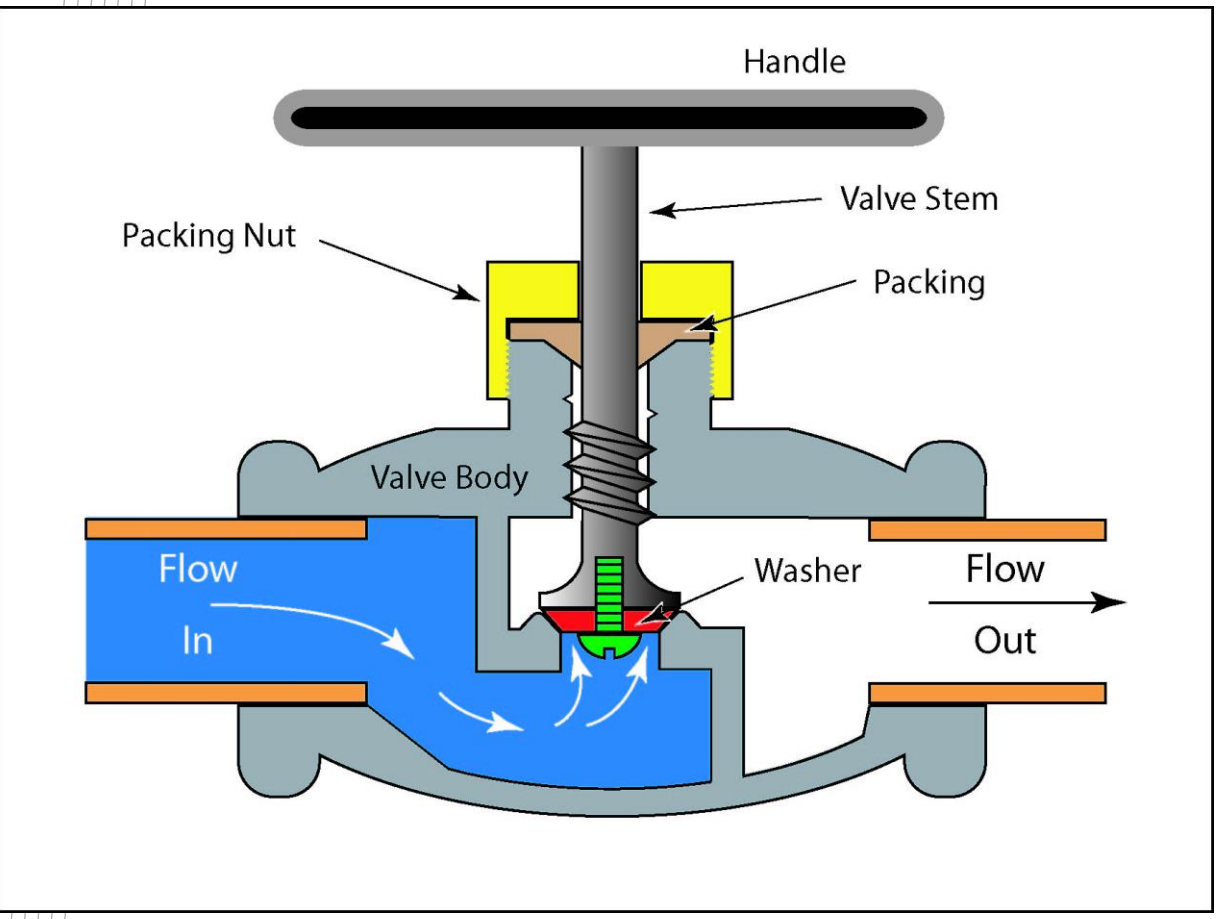

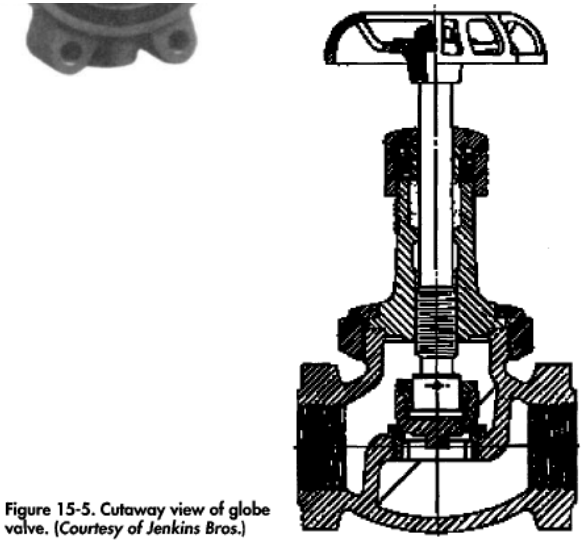

Figure 15-5. Cutaway view of globe valve. (*Courtesy of Jenkins Bros.*)

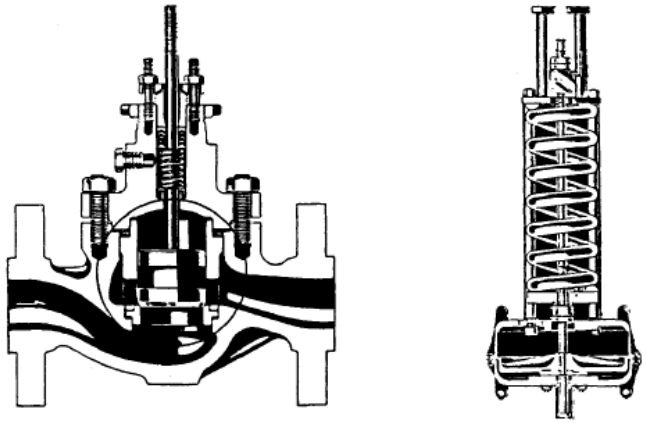

Figure 15-6. Typical single-port body control valve (left) and pneumatic actuator (right). (*Courtesy of Fisher Controls International, Inc.*)

Diaphragm valve

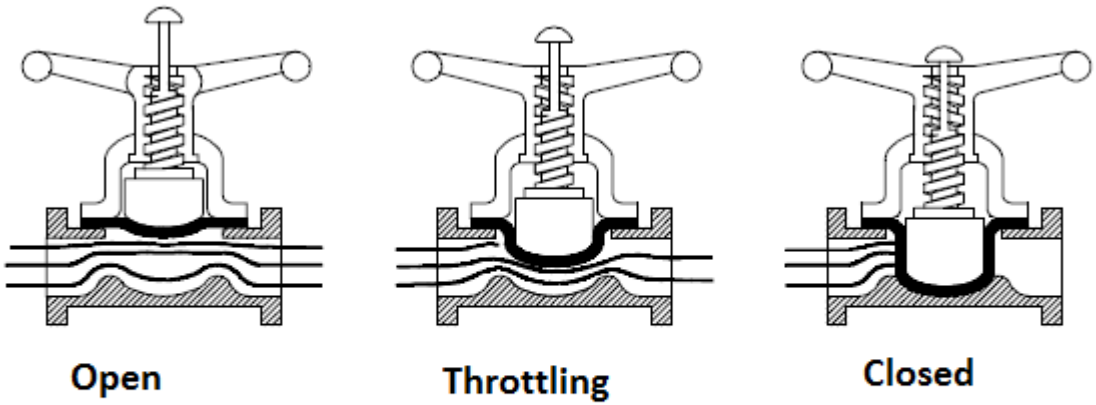

Diaphragm Valve Basics

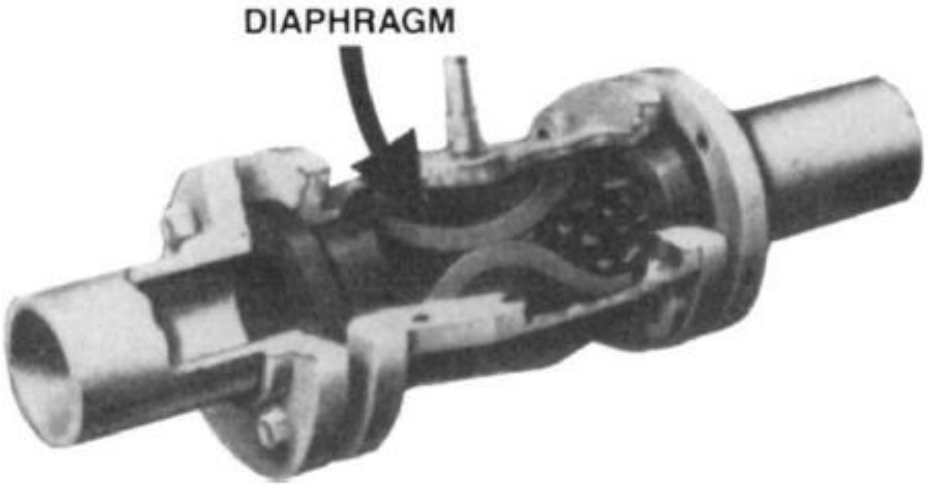

Figure 15-7. Diaphragm valve. (*Courtesy of Flexible Valve Corp.*)

Needle valve

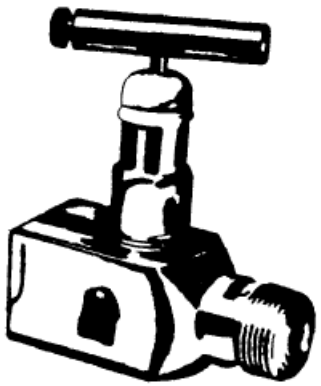

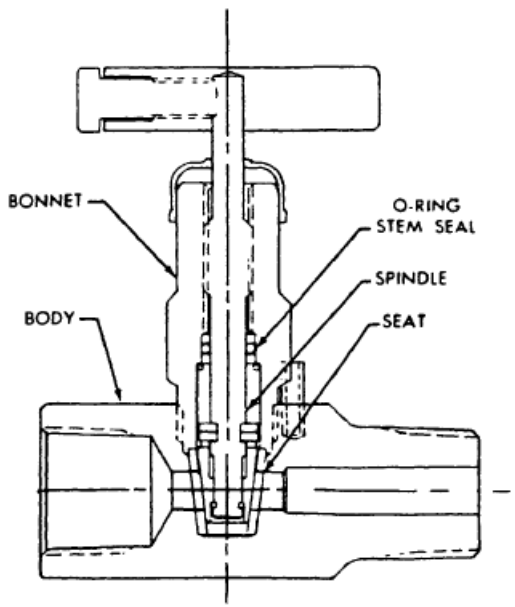

Figure 15-8. Needle valve. (*Courtesy of Anderson Greenwood and Co.*)

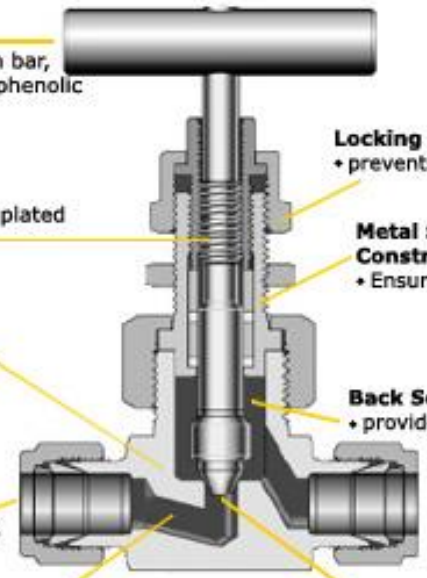

Check valve

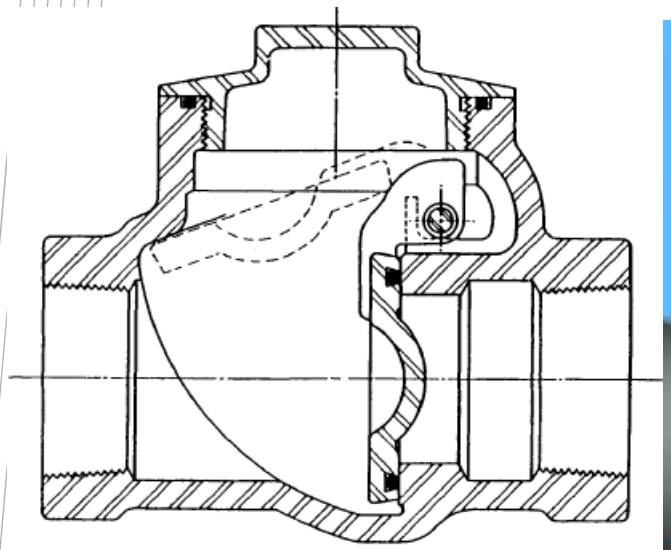

Figure 15-9. Swing check valve. (*Courtesy of Judd Valve Co., Inc.*)

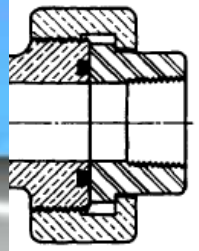

ley Pump and Valves, Inc.)

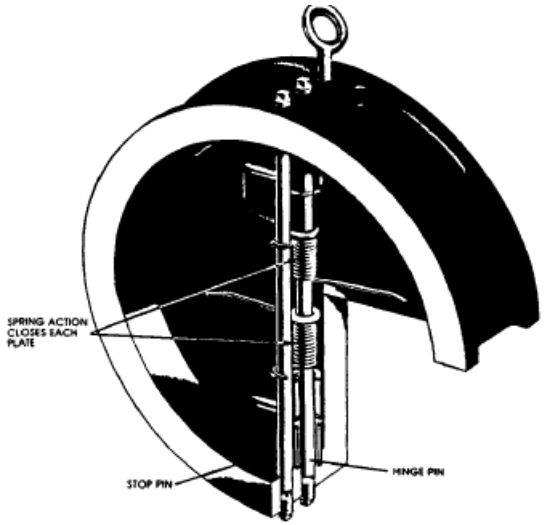

Figure 15-10. Wafer check valve. (*Courtesy of TRW Mission Drilling Products Division.*)

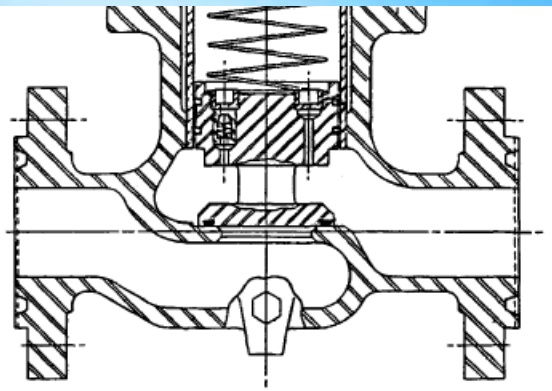

Figure 15-12. Piston check valve. (*Courtesy of Wheatley Pump and Valves, Inc.*)

Valve Selection

Table 15-3
Comparison of Valve Properties

Valve	Bubble Tight	Throttle	Where Used	Pig	Pressure Drop	Size
Ball	Yes	No On/Off	Isolation ubiquitous	Yes (Full)	Low	¼″–36″
Plug	Yes	No On/Off	Isolation Rare	No	Low	Rare Cheaper than ball
Gate	Yes	Some	Control, wellhead isolation, double block & bleed	Yes	Low	2″–Up Larger sizes cheaper than ball
Butterfly	Yes for low ΔP ANSI 150	Yes Gas Low ΔP	Isolation/Control	No	Low	2″–Up Larger sizes cheaper than globe
Globe	Not All	Yes	Control bypass, vent	No	High	2″–Up
Needle	Yes	Yes	Inst/Control	No Roddable		¼″–1½″
Check	No	No	To restrict reversal of flow Isolation	Swing check Valves only some cases	Low	½″–36″
Choke	Yes Adjustable choke only	Yes Adjustable choke only	Control	No	High	2″–9″ Bigger diameters special order

Courtesy of Paragon Engineering Services, Inc.

Designation

Table 15-4
Sample Valve Designation System

Each valve designation has four (4), and possibly five (5), parts.

(1) This part of each valve designation is always V, which stands for "valve."
(2) The second letter identifies valve type:

B = Ball
C = Check
D = Diaphragm
G = Gate
N = Needle
O = Globe
P = Plug
Y = Butterfly

(3) The third letter identifies end connections:

T = Threaded
S = Socketweld
F = Flanged
B = Buttweld

(4) The fourth part of each valve designation is a 2-, 3-, or 4- digit number indicating the highest ANSI or API class for which the valve can be used:

15 = ANSI 150
30 = ANSI 300
60 = ANSI 600
90 = ANSI 900
150 = ANSI 1500
250 = ANSI 2500
200 = 2000# API
300 = 3000# API
500 = 5000# API

(5) The fifth part of a valve designation, when used, is a modifier that distinguishes between two or more valves that have the same type and pressure rating but that are considered separately for some other reason.

Courtesy of Paragon Engineering Services, Inc.

VBF-15-1

Table 15-5
Sample Valve Table

Valve Designation:	VBF-15-1	
Service:	Hydrocarbons, Non-corrosive Glycol	
Type:	Ball Valve	
Rating:	ANSI 150	
	Design Temperature	Design Pressure
	−20° to 100°F	285 psig
	to 200°F	260 psig
	to 300°F	230 psig
Pressure Rating:	ANSI 150	
Body Material:	Carbon Steel	
Trim Material:	Hard Plated Carbon Steel Ball	
End Connection:	RF Flanged	
Valve Operator:	Lever through 8″, Gear Operated 10″ and larger	
Body Construction:	2″–4″: Floating Ball, Regular Port	
	6″ and larger: Trunnion Mounted Ball, Regular Port	
Trim Construction:	Renewable Seats, Removable Stem, Fire Safe	

Valve Comparison List

Manufacturer	Manufacturer's Fig. No.	Nominal Sizes
WKM	310-B100-CS-02-CS-HL	½″–4″
WKM	370CR-ANSI150RF21-AAF-21	6″–14″
Demco	121136X	2″–12″

Chokes

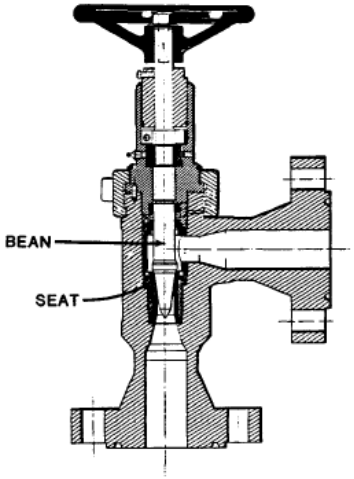

Figure 15-14. Plug and seat choke. (*Courtesy of Willis Control Division, Camera Iron Works, Houston.*)

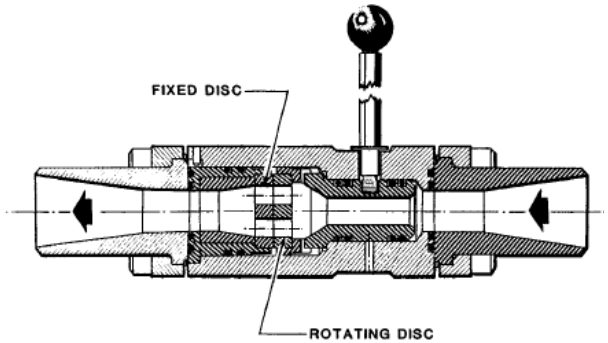

Figure 15-15. Rotating disc choke. (*Courtesy of Willis Control Division, Cameron Iron Works, Houston.*)

Piping design consideration

- Process pressure
  - Maximum allowable working pressure (MAWP)
  - Normal operating pressure
  - Future operating pressure
- Process temperature
  - Design temperature (max. vs min.)
  - Normal operating temperature
- Process liquid flow rates
- Process gas flow rates
- Two-phase flow rates
  - Viscosity
  - Solids
- Fluid compositions
  - Handling acid gases

- Selecting pipe sizes
  1. Establish operating conditions
  2. Calculate the allowable pipe ID using velocity
  3. Calculate the wall thickness for standard pipe size
  4. Calculate max and min capacities using velocity limits
  5. Estimate the pressure drop, compare to available pressure drop
  6. Determine which pipe size is best suited to all operating conditions
  7. Re-evaluate lines as piping drawings are developed.
  8. Proceed with design of pipe supports and stress analysis

Wall thickness of standard pipe

NPS	OD (inches)	Wall Thickness (inches)												
		SCH 10s	SCH 10	SCH 20	SCH 30	SCH 40s	SCH 40	SCH 60	SCH 80s	SCH 80	SCH 100	SCH 120	SCH 140	SCH 160
10	10.75	.165	.165	.250	.307	.365	.365	.500	.500	.593	.718	.843	1.000	1.125
12	12.75	.180	.180	.250	.330	.375	.406	.500	.500	.687	.843	1.000	1.125	1.312
14	14.00	.188	.250	.312	.375	.375	.437	.593	.500	.750	.937	1.093	1.250	1.406
16	16.00	.188	.250	.312	.375	.375	.500	.656	.500	.843	1.031	1.218	1.437	1.593
18	18.00	.188	.250	.312	.437	.375	.562	.750	.500	.937	1.156	1.375	1.562	1.781
20	20.00	.218	.250	.375	.500	.375	.593	.812	.500	1.031	1.280	1.500	1.750	1.968
24	24.00	.250	.250	.375	.562	.375	.687	.968	.500	1.218	1.531	1.812	2.062	2.343

SCH 80s = 80 ksi SMYS stainless steel

Pipe end connection

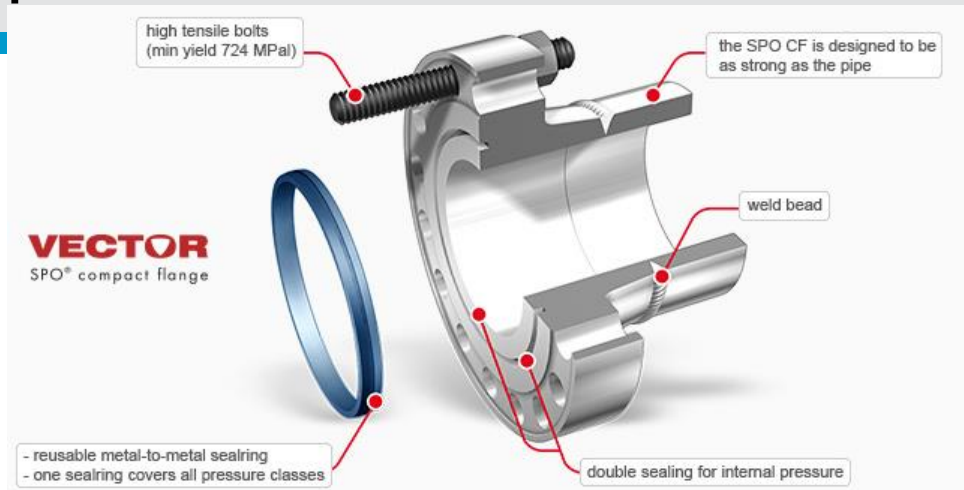

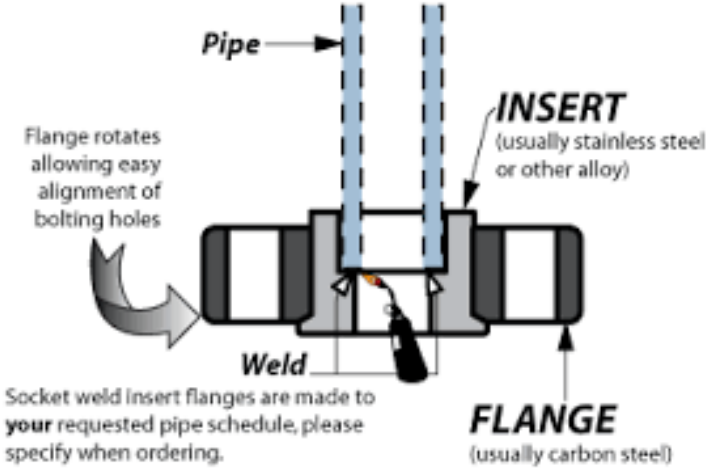

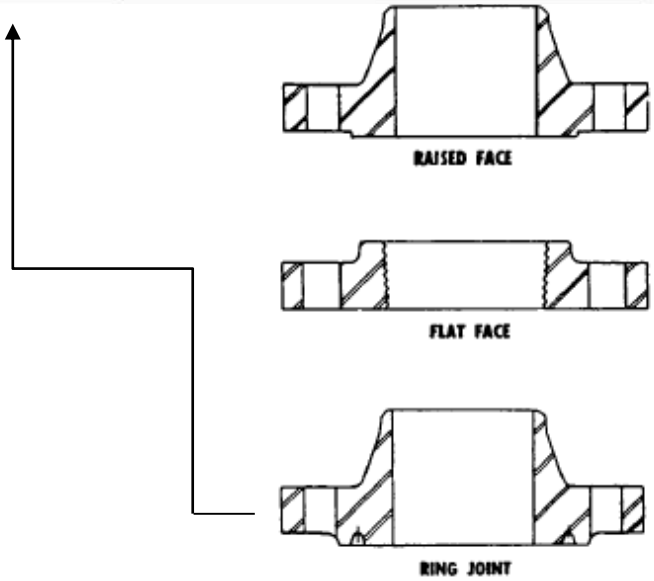

Figure 15-16. Typical flanges.

Branch connection

Table 15-6
Branch Connection Schedule—Welded Piping

1	2	3	4	5	6	7
Nominal Branch Size (in.)						
	½	¾	1	1½	2	2½
½	SWT	SWT	SWT	SWT	6SC	6SC
¾		SWT	SWT	SWT	SOL	6SC
1			SWT	SWT	SOL	SOL
1½				SWT	TR	SOL
2					T	RT
2½						T
3						
4						
6						
8						
10						
12						
14						
16						
18						

T—Straight Tee (Butt Weld)
RT—Reducing Tee (Butt Weld)
TR—Straight Tee and Reducer or Reducing Tee
WOL—Welded nozzle or equivalent (Schedule of Branch Pipe)
SOL—Socketweld couplings or equivalent—6000 lb Forged Steel
SWT—Socketweld Tee
6SC—6000 lb Forged Steel Socketweld Coupling (¾ inch and smaller threadolets or screwed couplings may be used for sample, gage, test connection and instrumentation purposes)

Fiberglass reinforced pipe

Insulation of pipe

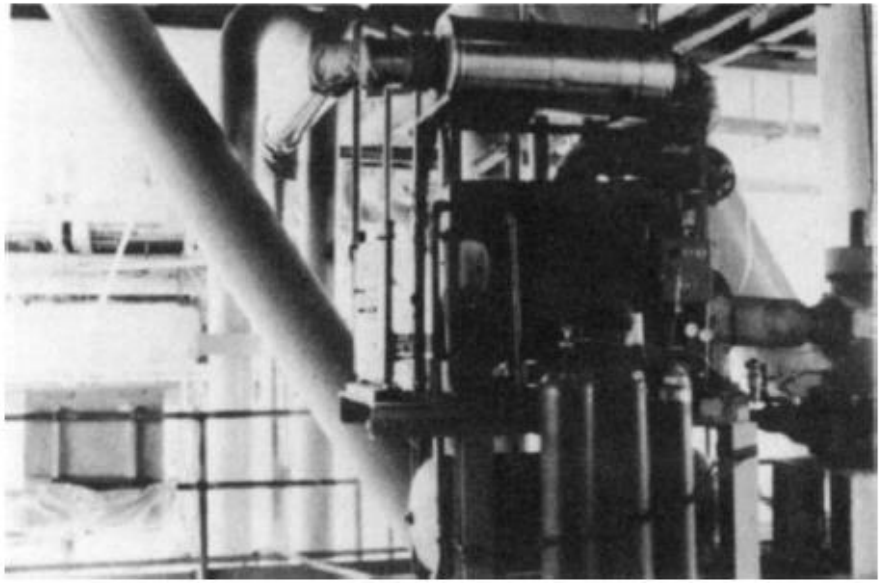

Figure 15-19. Insulation on this fire water pump is not necessary because it is not a hydrocarbon handling vessel and is not located in a classified area or work area.

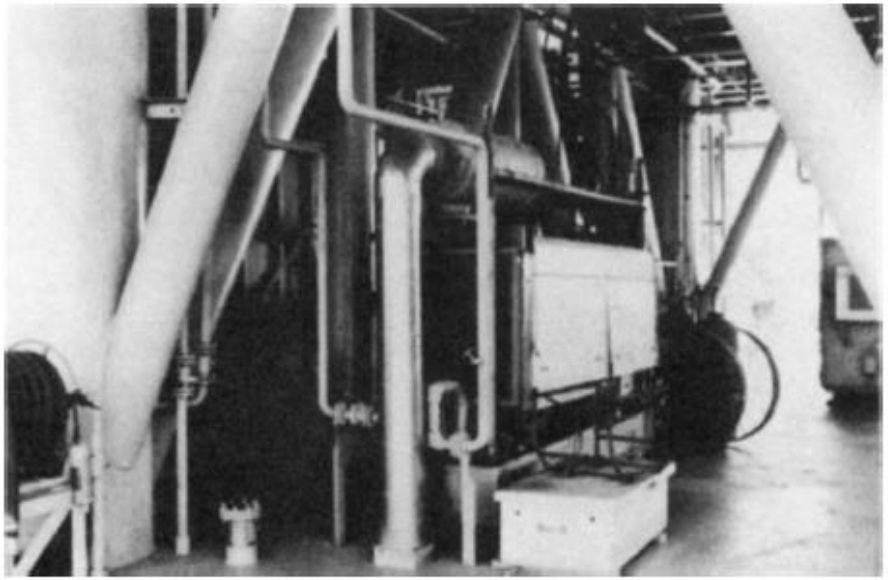

Figure 15-20. Insulation of the generator package is necessary because the exhaust system is located in a work area.

Target tee, Flange protection

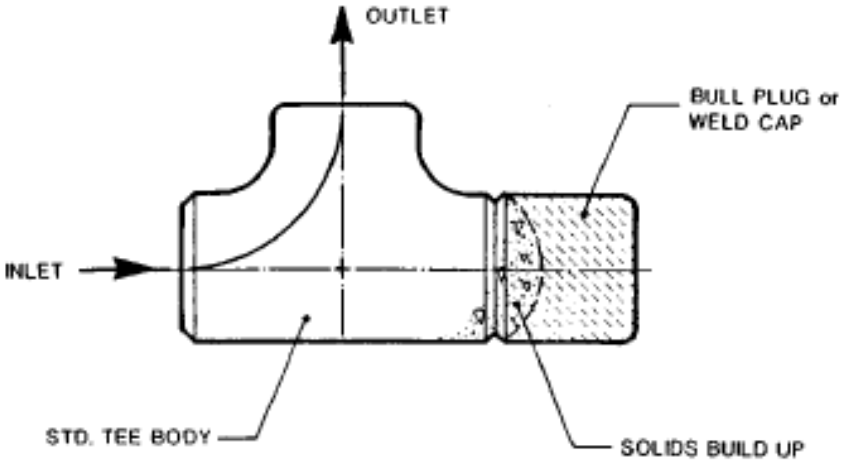

Figure 15-25. Target tee.

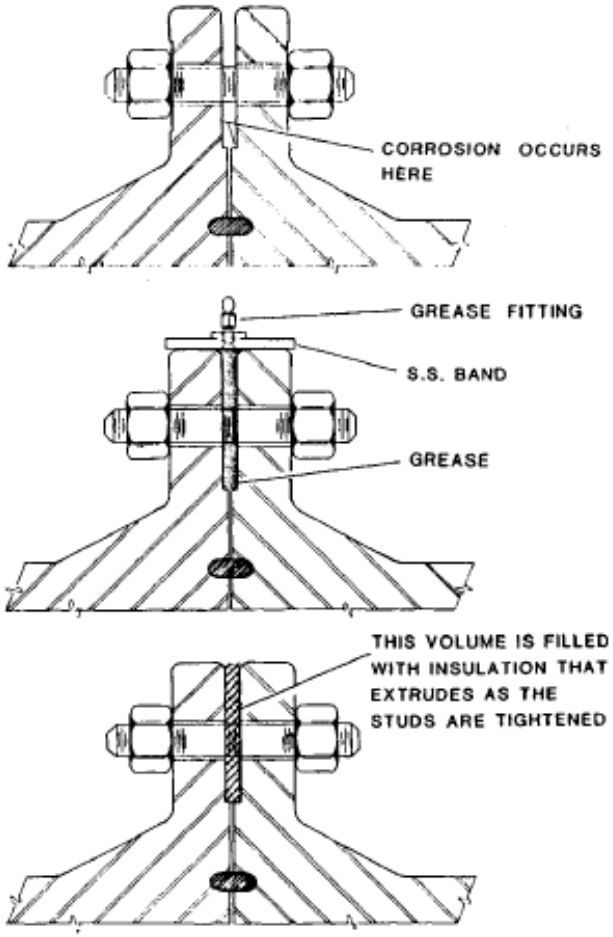

Figure 15-26. Flange protector types.

Vessel drain

- To drain the vessel, the throttling valve is shut and one or more drain valves are opened
- These valves open with no flow going through them
- Then the throttling valve is opened
- To stop draining, the throttling valve is closed, flow goes to zero and the drain valves are shut

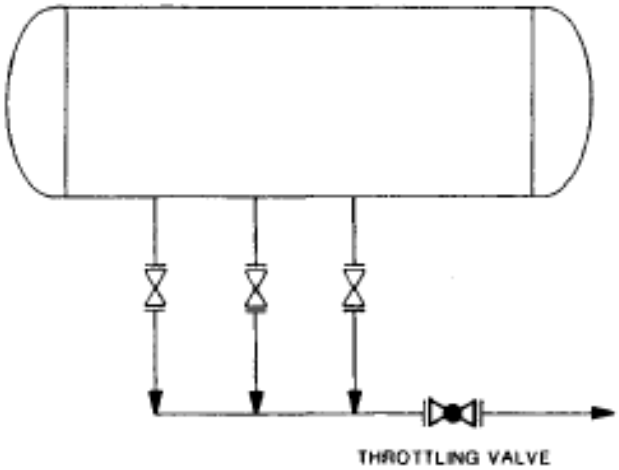

Figure 15-27. Drain valves for a separator.

Thank you, Question?