2014-2 항공기 구조역학 Homework #2

Problem 4.1. Simple hyperstatic bars - displacement method solution
Three axially loaded bars, each of length L and all constructed from a material of elasticity modulus E, are arranged as shown in fig. 4.9. Two bars are connected in parallel and one of these has a cross-sectional area that is twice that of the other. A third bar is connected in series at the common point. An axial load, P, is applied at the junction of the three bars. Using the displacement method, determine *(1)* the displacement, d, of the connecting point between the three bars and *(2)* the forces in each of the three bars.

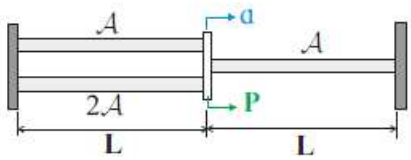

Fig. 4.9. Three bars in a parallel-series configuration.

Problem 4.2. Simple hyperstatic bars - force method solution
Solve problem 4.1 using using the force method.

Problem 4.3. Prestressed steel bar in an aluminum tube
A steel bar of cross-sectional area $\mathcal{A}_s = 800$ mm^2 fits inside an aluminum tube of cross-sectional area $\mathcal{A}_a = 1,500$ mm^2. The assembly is constructed in such a way that initially, the steel bar is prestressed with a compressive force, $-P$, while the aluminum tube is prestressed with a tensile load of equal magnitude, P. Next, the prestressed assembly is subjected to a tensile load F. *(1)* If no prestress is applied, *i.e.*, if $P = 0$, find the maximum external load, F, that can be applied to the assembly without exceeding allowable stress levels in either material. *(2)* Find the optimum prestress level to be applied. This optimum prestress is defined as that for which the allowable stress is reached simultaneously in both steel bar and aluminum tubes when subjected to the externally applied force, F. In other words, when optimally prestressed, both materials are used to their full capacity. *(3)* What improvement, in percent, is achieved by using the optimum prestress level as compared to not prestressing the assembly. Use the following data: $E_s = 210$ and $E_a = 73$ GPa; the yield stresses for steel and aluminum are $\sigma_y^s = 600$ and $\sigma_y^a = 400$ MPa, respectively.

Problem 4.6. Rotor blade hub connection

Figure 4.11 shows a potential design for the attachment of a rotor blade to the rotorcraft hub. The yoke consists of two separate pieces each of which connects the rotor blade to the hub, and the spindle also connects the rotor blade to the hub through an elastomeric bearing. As the rotor blade spins, a large centrifugal force F is applied to the assembly, which can be idealized as three parallel bars of length L, which connect the blade to the hub. The two bars modeling the yoke each have an axial stiffness $(E\mathcal{A})_y$, while the spindle has an axial stiffness $(E\mathcal{A})_s$. The elastomeric bearing is idealized as a very short spring of stiffness k_b in series with the spindle. *(1)* Calculate and plot the non-dimensional forces in the yoke, F_y/F, and in the spindle, F_s/F, as a function of the non-dimensional bearing stiffness, $0 \leq Lk_b/(E\mathcal{A})_s \leq 25$. *(2)* For what value of the stiffness constant k_b is all the centrifugal load carried by the yoke? *(3)* Find the maximum load that can be carried by the spindle. What is the corresponding value of k_b? *(4)* For what value on $Lk_b/(E\mathcal{A})_s$ do the yoke and spindle carry equal loads? Use the following data: $(E\mathcal{A})_y/(E\mathcal{A})_s = 0.8$

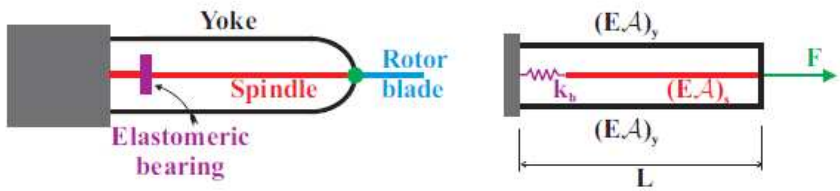

Fig. 4.11. Rotor blade connection to the hub by means of a yoke and spindle.

Problem 5.7. Box beam with strain gauges

A cantilevered beam of length L is subjected to axial and transverse loads. Figure 5.34 depicts the cross-section of the beam: an aluminum rectangular box of height $h = 0.30$ m, width $b = 0.15$ m, flange thickness $t_a = 12$ mm, and web thickness $t_w = 5$ mm. The beam is reinforced by two layers of unidirectional composite material of thickness $t_c = 4$ mm. The Young's moduli for the aluminum and unidirectional composite are $E_a = 73$ GPa and $E_c = 140$ GPa, respectively. At a station along the span of the beam, an experimentalist has measured the axial strains on the top and bottom flanges of the beam as $\epsilon_{\text{top}} = -2560\mu$ and $\epsilon_{\text{bot}} = 3675\mu$, respectively. Find the bending moment and axial force acting at that station.

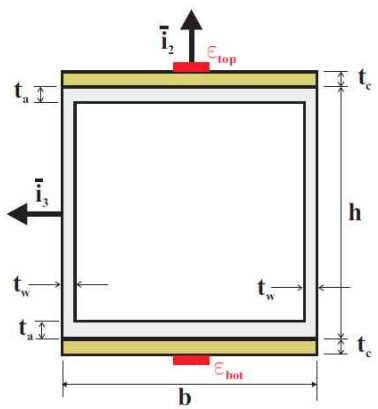

Fig. 5.34. Cross-section of a reinforced rectangular box beam.

Problem 5.10. Cantilever beam with tip rotational spring

The uniform cantilevered beam of bending stiffness H_{33}^c and length L depicted in fig. 5.37 features a tip rotational spring of stiffness constant k. Due to manufacturing imperfections, the spring applies a restoring moment on the beam that is proportional to $(\mathrm{d}\bar{u}_2/\mathrm{d}x_1 - \theta_0)$, where θ_0 represents the imperfection magnitude. *(1)* Find the magnitude and location of the maximum bending moment in the beam due to the imperfection in the structure. *(2)* Plot the maximum bending moment $LM_3^{\max}/(\theta_0 H_{33}^c)$ as a function of the non-dimensional spring constant $\bar{k} = kL/H_{33}^c$. Explain your result in physical terms.

Problem 5.11. Cantilever beam with tip spring

Consider the cantilevered beam of length L with a tip spring of stiffness k depicted in fig. 5.38. The beam is subjected to a uniform transverse load, p_0, and a tip concentrated load, P. *(1)* Write the governing differential equation and associated boundary conditions for this problem.

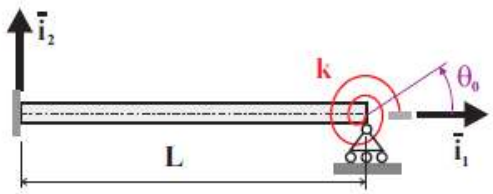

Fig. 5.37. Cantilevered beam with tip torsional spring.

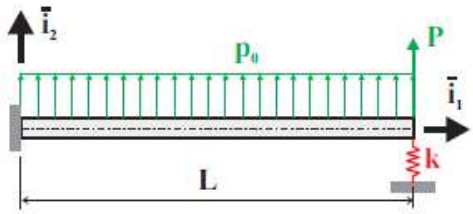

Fig. 5.38. Cantilevered beam with tip spring.