Student Number: **2020.9.23**

Name:

Analog Electronic Circuits

Department of Electrical Engineering and Computer Science

Seoul National University

Quiz 2 Sol

D.K. Jeong

1. Consider a MOS differential pair shown below. When the common mode input signal V_{CM} is increased by ΔV, answer following questions. Assume $R_{SS} < \infty$. (Neglect channel-length modulation, and M1 and M2 are the same if not the mismatch)

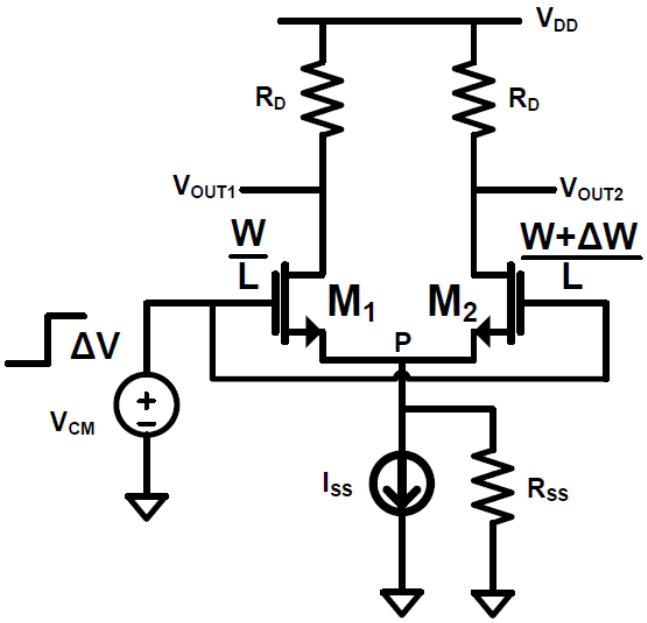

a. Find A_{CM}. (Assume that the circuit is symmetric without the mismatches, ΔW=0)

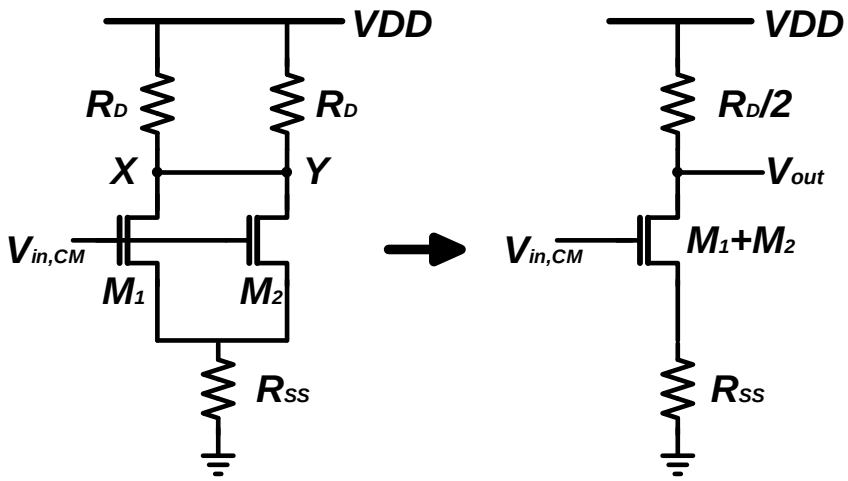

$$A_{v,CM} = \frac{V_{OUT}}{V_{in,CM}} = -\frac{R_D/2}{1/2g_m + R_{SS}}$$

(M1 = M2 ➔ gm1 = gm2)

Student Number: **2020.9.23**

Name:

b. When the mismatch is small (ΔW<<W), Find A_{DM}.
Since the node P is the virtual ground, $A_{v,DM} = -g_m R_D$

c. Find A_{CM-DM}.

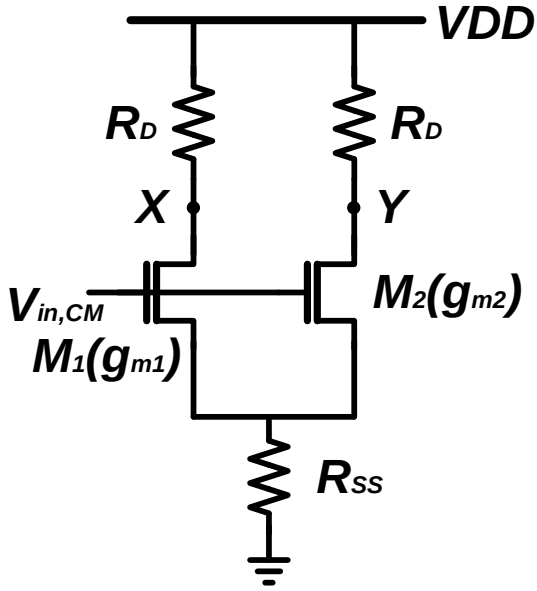

$I_{D1} = g_{m1}(V_{in,CM} - V_P)$ and $I_{D2} = g_{m2}(V_{in,CM} - V_P)$.
Since $(I_{D1} + I_{D2})R_{SS} = V_P$, $(g_{m1} + g_{m2})(V_{in,CM} - V_P)R_{SS} = V_P$

$$And\ V_P = \frac{(g_{m1} + g_{m2})R_{SS}}{(g_{m1} + g_{m2})R_{SS} + 1} V_{in,CM}$$

$$V_X = -g_{m1}(V_{in,CM} - V_P)R_D = \frac{-g_{m1}}{(g_{m1} + g_{m2})R_{SS} + 1} R_D V_{in,CM}$$

$$V_Y = -g_{m2}(V_{in,CM} - V_P)R_D = \frac{-g_{m2}}{(g_{m1} + g_{m2})R_{SS} + 1} R_D V_{in,CM}$$

$$V_{out} = V_X - V_Y = \frac{-(g_{m1} - g_{m2})}{(g_{m1} + g_{m2})R_{SS} + 1} R_D V_{in,CM} = \frac{-\Delta g_m}{(2g_m + \Delta g_m)R_{SS} + 1} R_D V_{in,CM}$$

$$A_{CM-DM} = \frac{V_X - V_Y}{V_{in.CM}} = \frac{-\Delta g_m R_D}{(g_{m1} + g_{m2})R_{SS} + 1} = \frac{-\Delta g_m R_D}{(2g_m + \Delta g_m)R_{SS} + 1} =$$

d. Find CMRR.

$$CMRR = \left|\frac{A_{DM}}{A_{CM-DM}}\right| = \frac{g_m}{\Delta g_m}((2g_m + \Delta g_m)R_{SS} + 1)$$