1.(a) R_{in}, R_{out} & closed-loop gain 각 1 점. open-loop gain 만 구하면 0.5 점 감점

(a) We can break the feedback network as shown here:

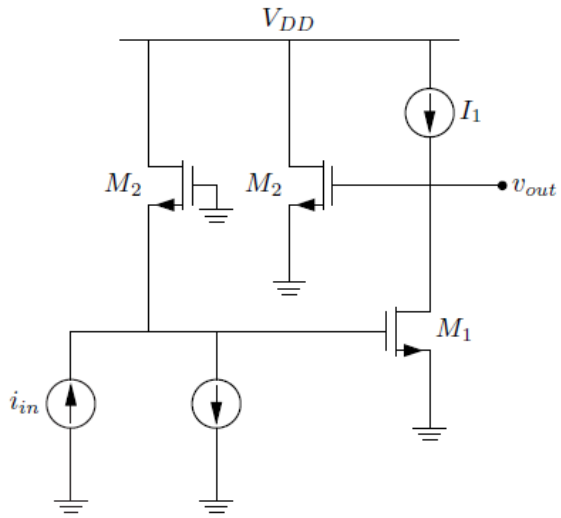

$$A_{OL} = -g_{m1} r_{o1} \left(\frac{1}{g_{m2}} \parallel r_{o2} \right)$$

To find the feedback factor K, we can use the following diagram:

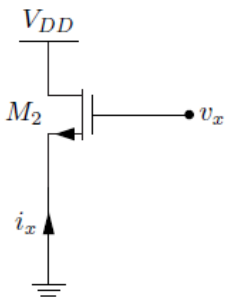

$$K = \frac{v_x}{i_x} = -g_{m2}$$

$$\frac{v_{out}}{i_{in}} = \boxed{-\frac{g_{m1} r_{o1} \left(\frac{1}{g_{m2}} \parallel r_{o2} \right)}{1 + g_{m1} g_{m2} r_{o1} \left(\frac{1}{g_{m2}} \parallel r_{o2} \right)}}$$

$$R_{in,open} = \frac{1}{g_{m2}} \parallel r_{o2}$$

$$R_{in,closed} = \boxed{\frac{\frac{1}{g_{m2}} \parallel r_{o2}}{1 + g_{m1} g_{m2} r_{o1} \left(\frac{1}{g_{m2}} \parallel r_{o2} \right)}}$$

$$R_{out,open} = r_{o1}$$

$$R_{out,closed} = \boxed{\frac{r_{o1}}{1 + g_{m1} g_{m2} r_{o1} \left(\frac{1}{g_{m2}} \parallel r_{o2} \right)}}$$

1.(b) R_{in}, R_{out} & closed-loop gain 각 1 점. open-loop gain 만 구하면 0.5 점 감점

(b) We can break the feedback network as shown here:

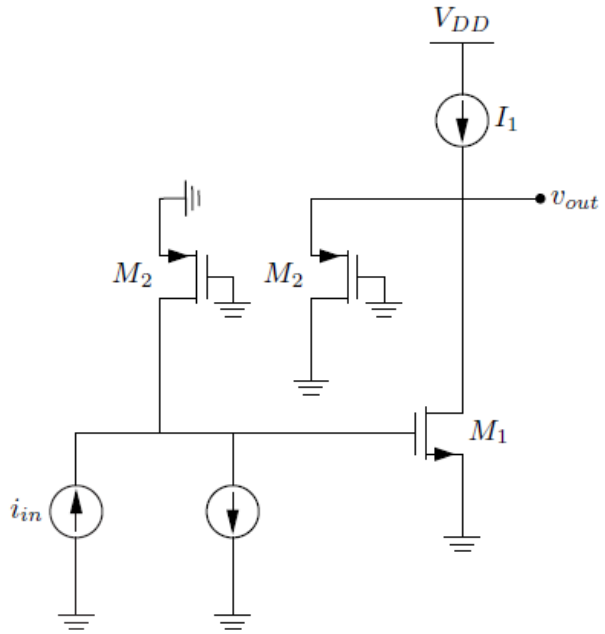

$$A_{OL} = -g_{m1}r_{o2}\left(r_{o1} \parallel \frac{1}{g_{m2}} \parallel r_{o2}\right)$$

To find the feedback factor K, we can use the following diagram:

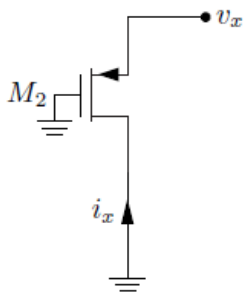

$$K = \frac{v_x}{i_x} = -g_{m2}$$

$$\frac{v_{out}}{i_{in}} = \boxed{-\frac{g_{m1}r_{o2}\left(r_{o1} \parallel \frac{1}{g_{m2}} \parallel r_{o2}\right)}{1 + g_{m1}g_{m2}r_{o2}\left(r_{o1} \parallel \frac{1}{g_{m2}} \parallel r_{o2}\right)}}$$

$$R_{in,open} = r_{o2}$$

$$R_{in,closed} = \boxed{\frac{r_{o2}}{1 + g_{m1}g_{m2}r_{o2}\left(r_{o1} \parallel \frac{1}{g_{m2}} \parallel r_{o2}\right)}}$$

$$R_{out,open} = r_{o1} \parallel \frac{1}{g_{m2}} \parallel r_{o2}$$

$$R_{out,closed} = \boxed{\frac{r_{o1} \parallel \frac{1}{g_{m2}} \parallel r_{o2}}{1 + g_{m1}g_{m2}r_{o2}\left(r_{o1} \parallel \frac{1}{g_{m2}} \parallel r_{o2}\right)}}$$

1.(c) R_{in}, closed-loop gain 각 1 점, R_{out} 2 점. open-loop gain 만 구하면 0.5 점 감점

(c) We can break the feedback network as shown here:

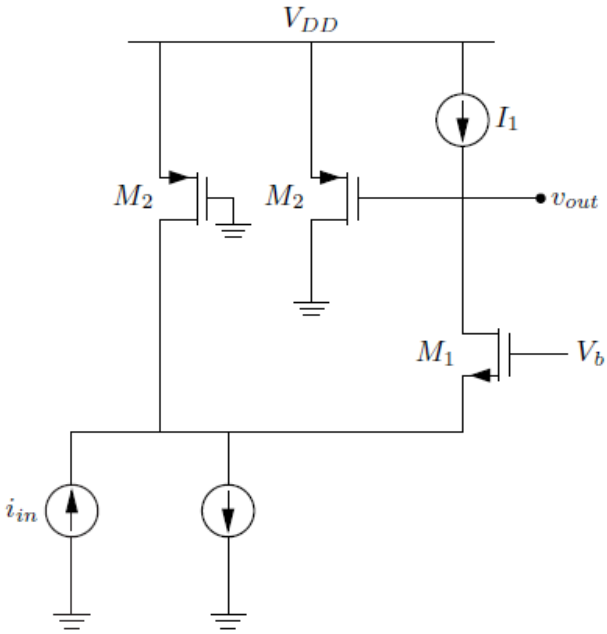

$$A_{OL} = g_{m1} r_{o1} \left(\frac{1}{g_{m1}} \parallel r_{o2} \right)$$

To find the feedback factor K, we can use the following diagram:

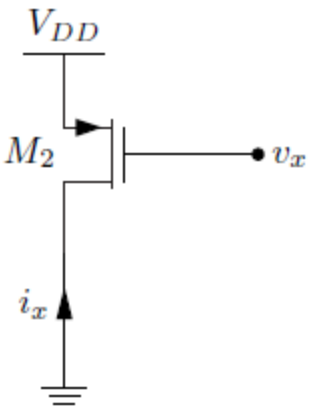

$$K = \frac{i_x}{v_x} = g_{m2}$$

$$\frac{v_{out}}{i_{in}} = \boxed{\frac{g_{m1} r_{o1} \left(\frac{1}{g_{m1}} \parallel r_{o2} \right)}{1 + g_{m1} g_{m2} r_{o1} \left(\frac{1}{g_{m1}} \parallel r_{o2} \right)}}$$

$$R_{in,open} = \frac{1}{g_{m1}} \parallel r_{o2}$$

$$R_{in,closed} = \boxed{\frac{\frac{1}{g_{m1}} \parallel r_{o2}}{1 + g_{m1} g_{m2} r_{o1} \left(\frac{1}{g_{m1}} \parallel r_{o2} \right)}}$$

$$R_{out,open} = r_{o1} + (1 + g_{m1} r_{o1}) r_{o2}$$

$$R_{out,closed} = \boxed{\frac{r_{o1} + (1 + g_{m1} r_{o1}) r_{o2}}{1 + g_{m1} g_{m2} r_{o1} \left(\frac{1}{g_{m1}} \parallel r_{o2} \right)}}$$