Analog Electronic Circuits
Department of Electrical and Computer Engineering
Seoul National University

2020 Fall D.K. Jeong

Quiz #6

1. Consider the following circuit below.
Assume that V_{CC} = 15V, V_{EE} = -15V, V_T = 26mV, $I_{S,Q1} = I_{S,Q2} = I_{S,Q3} = I_{S,Q4} = 10^{-14}$A, $V_A = \infty$, and $\beta_{Q1}=\beta_{Q2}=\beta_{Q3}=\beta_{Q4}=100$. Also assume that the output is sinusoidal with maximum amplitude of 8V (i.e. $V_{OUT} = 8\sin\omega t$).

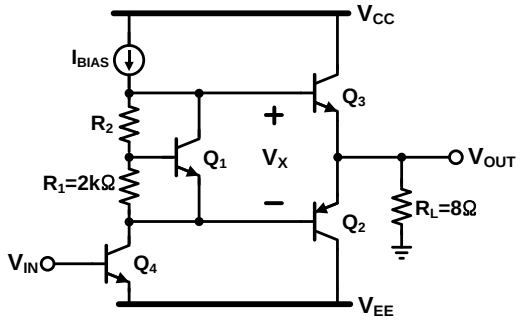

Fig. 1

(a) Calculate the minimum value of a bias current, I_{BIAS}.

$V_{OUT} = 8V$ 일 때 I_{B3} 가 최대이므로, 이 때 $I_{B,Q3} \le I_{BIAS}$ 조건을 만족시켜야 함.

➔ $I_{C,Q3} = \frac{8V}{8\Omega} = (\beta + 1)I_{B,Q3}$

➔ $I_{B,Q3} \approx 10mA$

$\therefore I_{BIAS} \ge 10mA$ → $I_{BIAS,min} = 10mA$

(b) Using the minimum value of (a), find the value of R_2 to set the quiescent current at the output to 20mA. (Quiescent current condition : V_{OUT}=0)

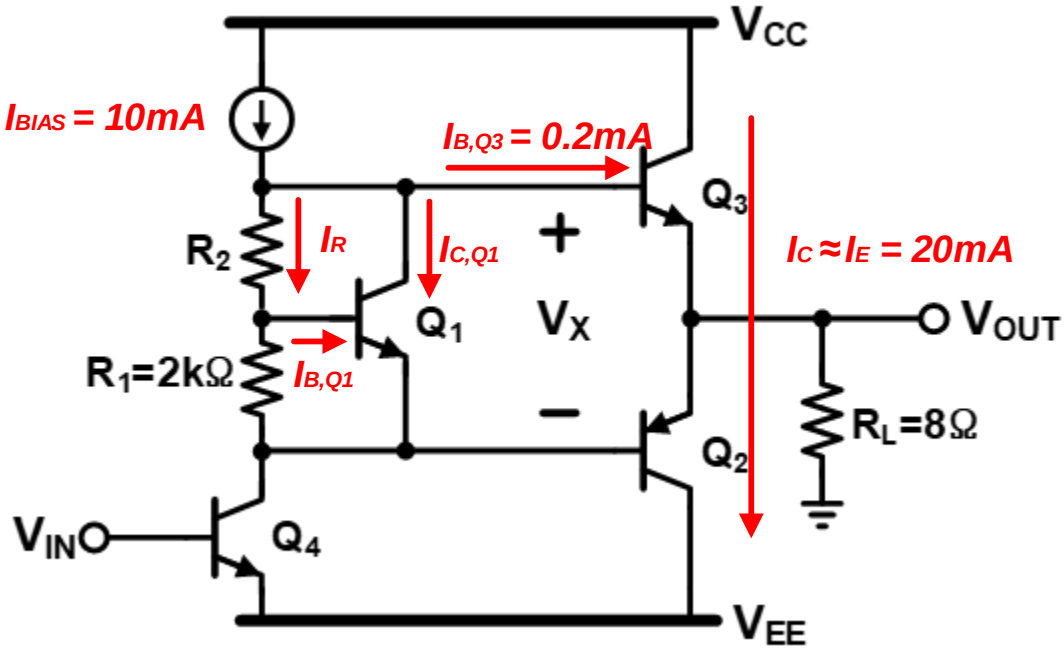

$$V_X = V_{BE3} + V_{EB2} = V_T ln\frac{I_{C,Q3}}{I_{S,Q3}} + V_T ln\frac{I_{C,Q2}}{I_{S,Q2}} = 2 \times 26\text{mV} \times \ln\frac{20mA}{10^{-14}A} = 1.473V \quad -(1)$$

$$V_{BE1} = V_T ln\frac{I_{C,Q1}}{I_{S,Q1}} = 2k\Omega \times \left(I_R - \frac{I_{C,Q1}}{\beta}\right), \quad I_{C,Q1} = 10mA - 200uA - I_R$$

→ $I_R \approx 452uA,\ V_{BE1} = 0.717V \quad -(2)$

(1), (2)에 의해 $V_X = V_{BE1} + R_2 \times I_R$ → $1.473V = 0.717 + R_2 \times 452uA$

$\therefore R_2 \approx 1.673k\Omega$