6. Hydraulic Cylinders

- Construction & design features of hydraulic cylinders
- Hydraulic cylinder mountings
- Load-carrying capacity, speed, & power

- Operation & features of double-rod cylinders
- Max. pressure developed by cushions
- Telescoping cylinders

- Hydraulic shock absorbers
- Analysis of hydraulic cylinder piston rod forces

유압 액츄에이터

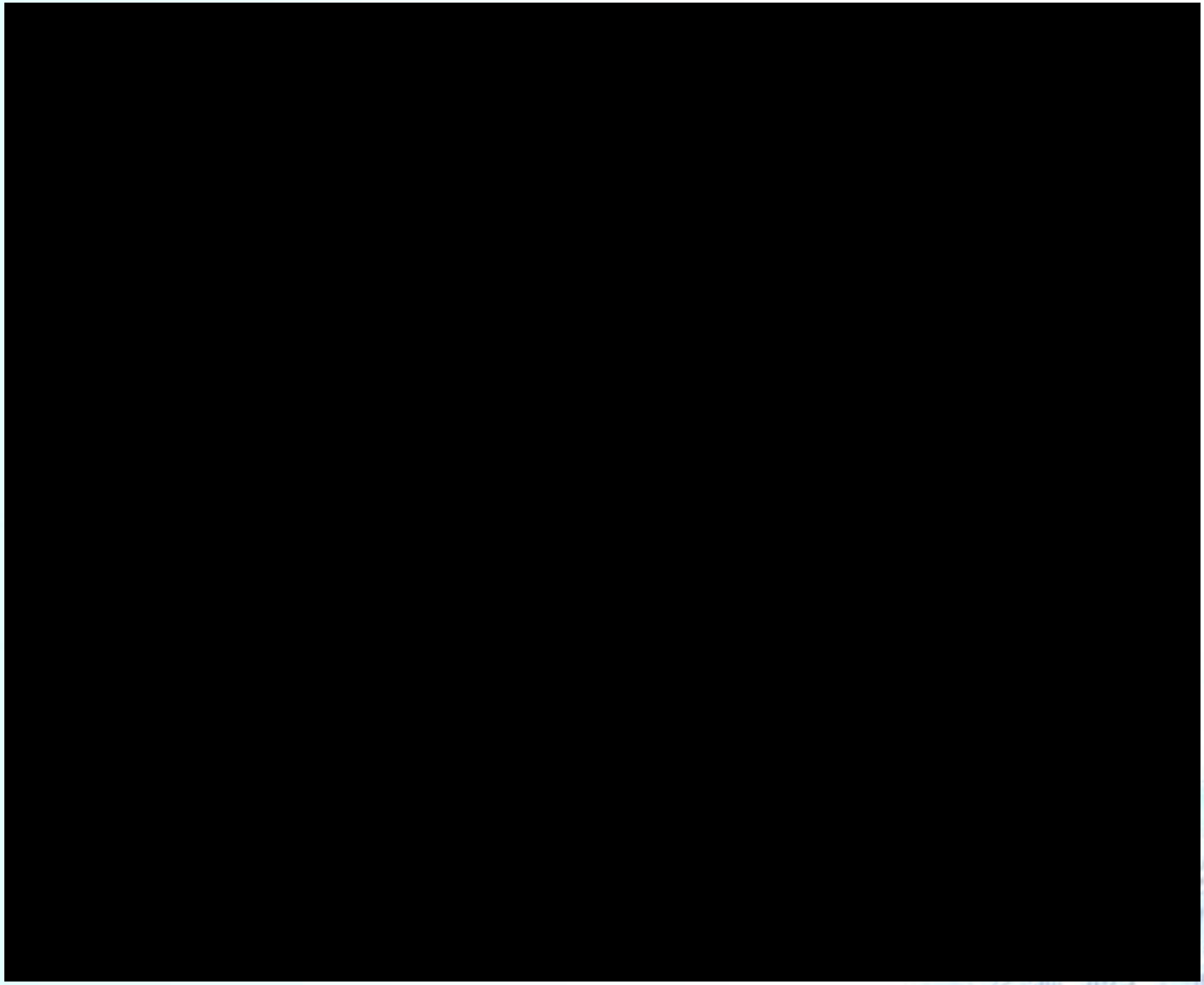

액츄에이터(Actuator)의 기능상 분류

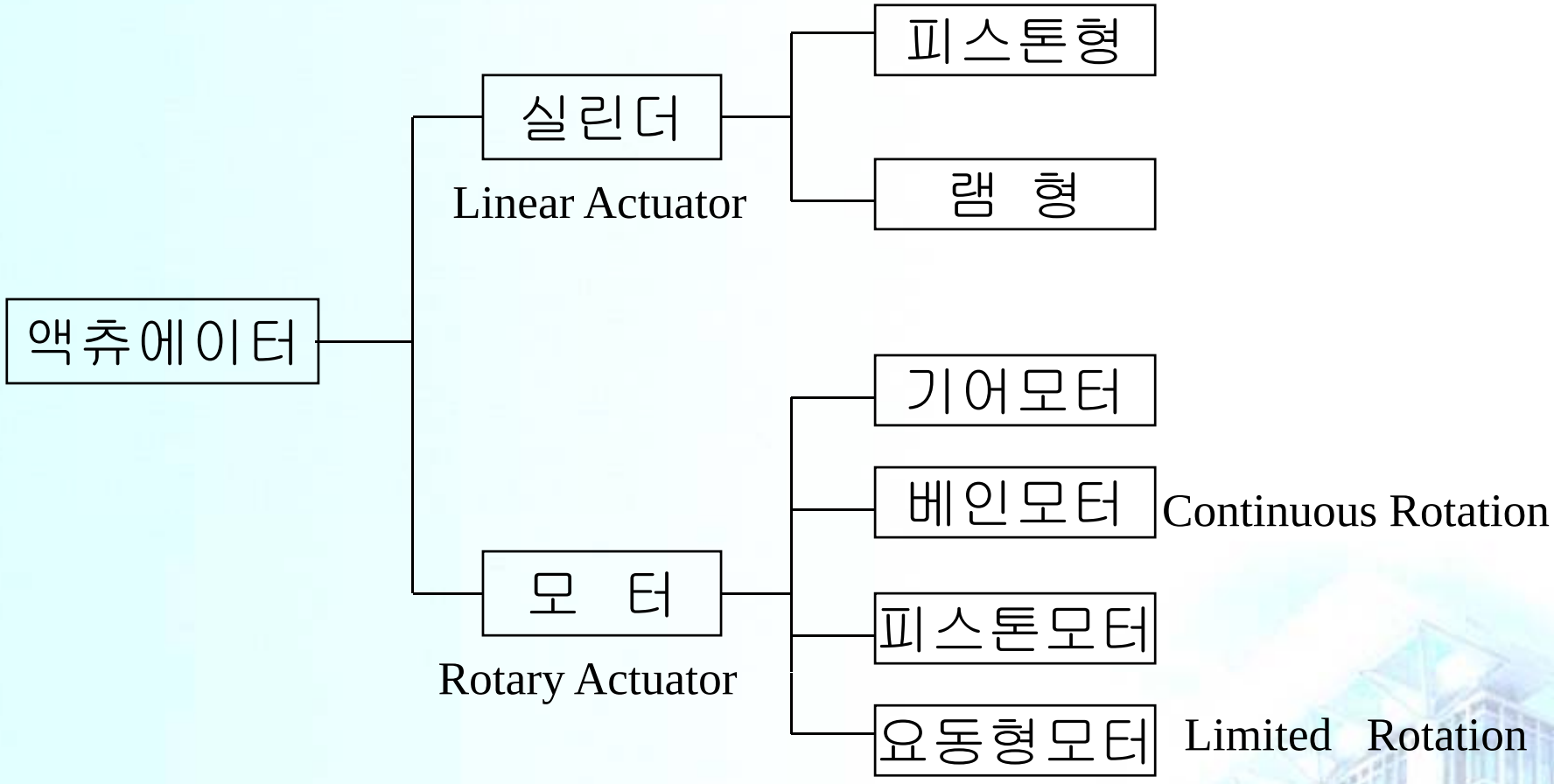

선형 액츄에이터(Linear Actuators)의 응용

지게차

Motion Simulator

Press

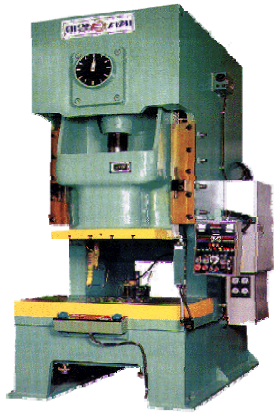

비행기 조종익

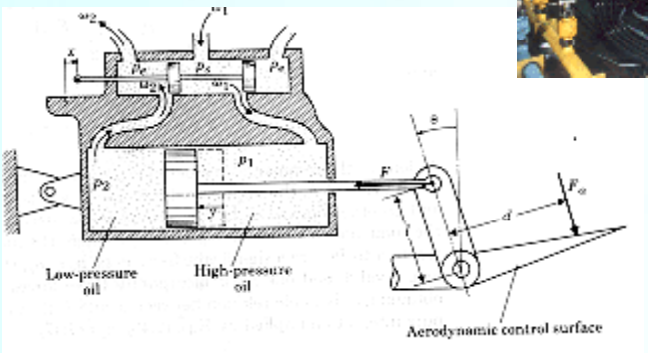

Robot

Rough terrain forklift driven by hydraulic cylinders

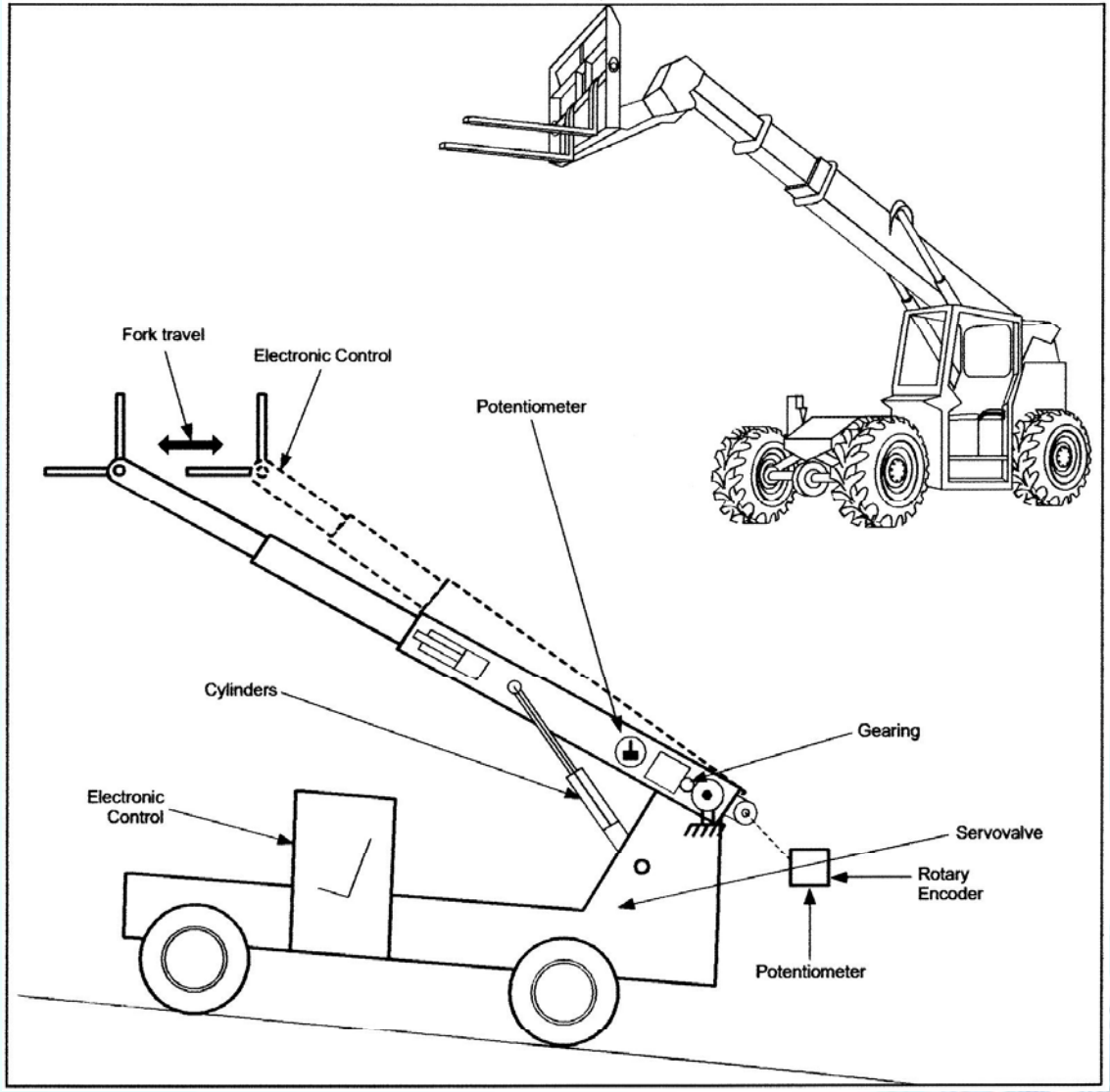

유압 실린더의 종류

- 단동형(Single acting)
  복동형(Double acting)

- 단로드형(Single rod)
  양로드형(Double rod)

- 축심고정형/ 축심회전형
  - foot type
  - flange type
  - trunnion type
  - clevis type

❖ 플런저 램형 (단동식)

❖ 피스톤형 (단동식)

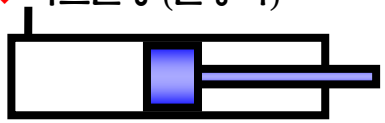

❖ 단로드형 (복동식)

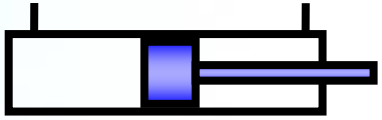

❖ 양로드형 (복동식)

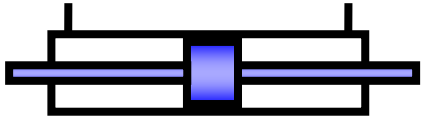

•속도는 일반적으로 10m/min 이내, 5m/min 이상이면 쿠션장치 필요

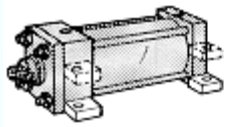

FOOT AND CENTERLINE LUG MOUNTS

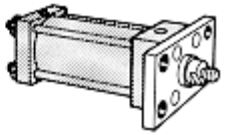

RECTANGULAR FLANGE MOUNT

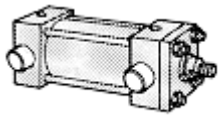

TRUNNION MOUNT

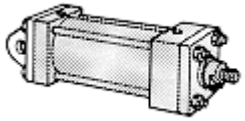

CLEVIS MOUNT

Double-acting Cylinder Design

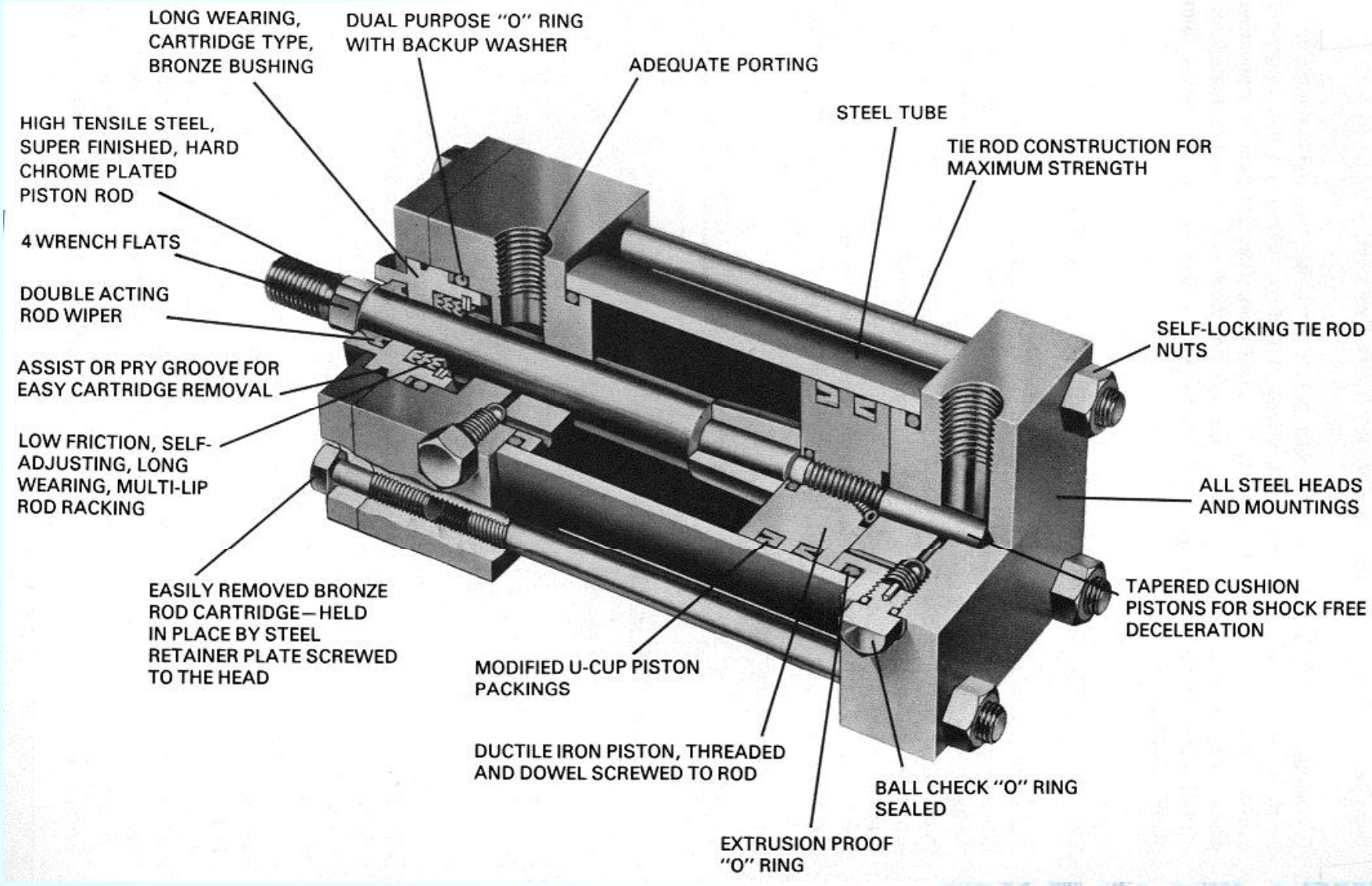

Cylinder Construction

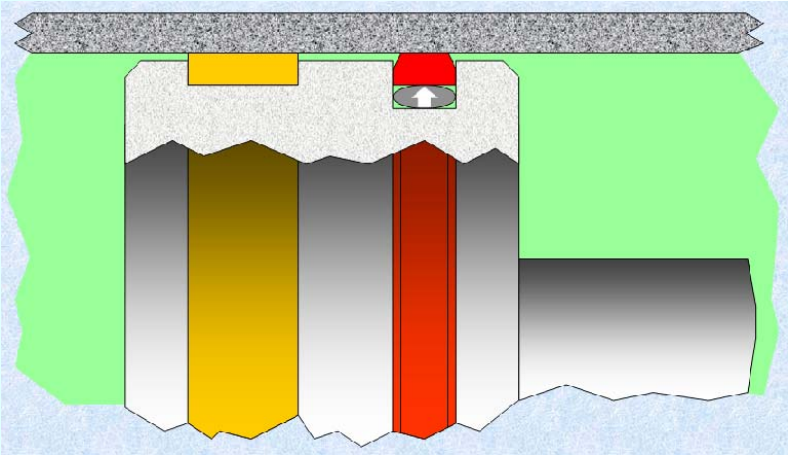

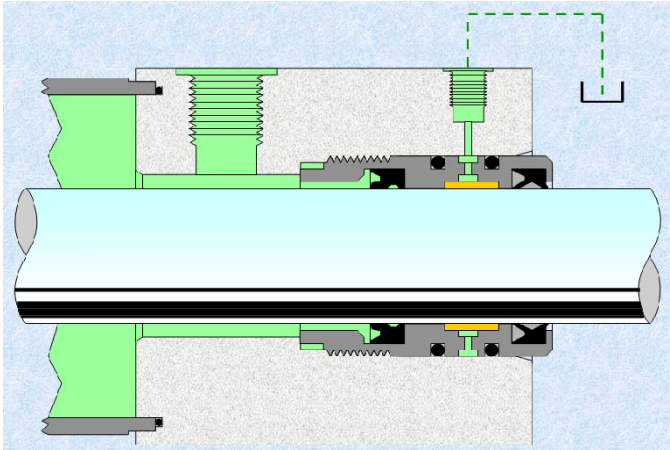

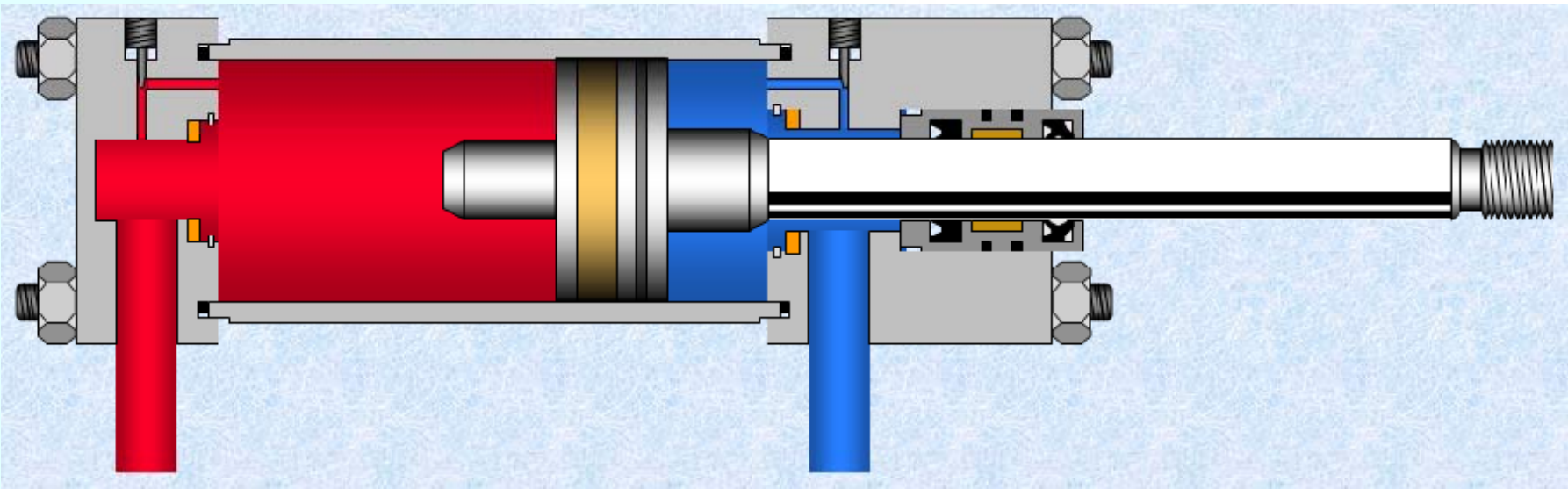

Cylinder Selection

TIE ROD CYLINDERS

EATON

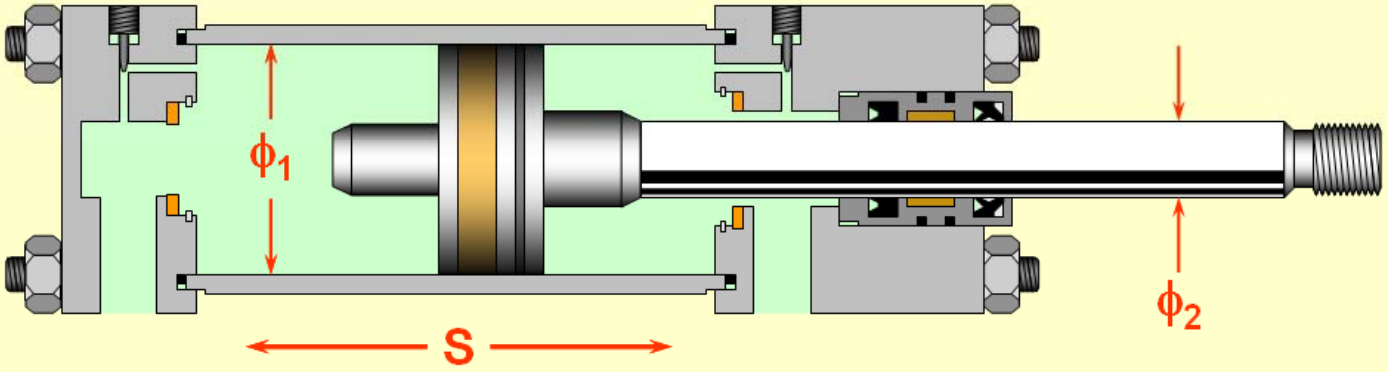

	TV	TZ
ϕ_1	mm (25 - 200)	inch (1½ - 8)
ϕ_2	mm (12 ...)	inch (...)
S	mm	inch
	ISO 6020-2	ANSI B93.15

Various Cylinder Mounting

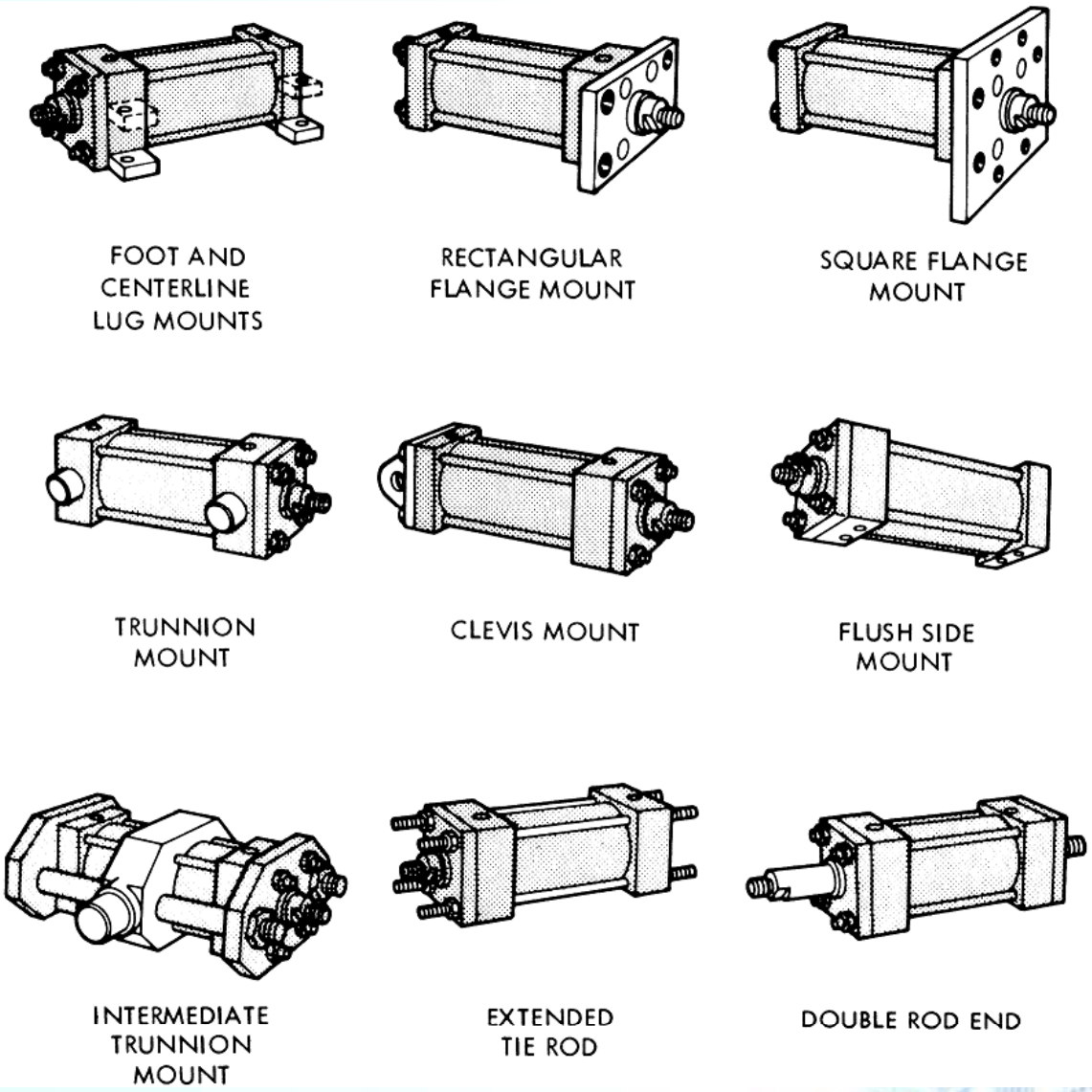

Universal Alignment Mounting Accessory

- **Benefits**
  - **Freer range of mounting positions**
  - **Reduced cylinder binding and side loading**
  - **Allowance for universal swivel**
  - **Reduced bearing and tube wear**
  - **Elimination of piston blow-by caused by misalignment**

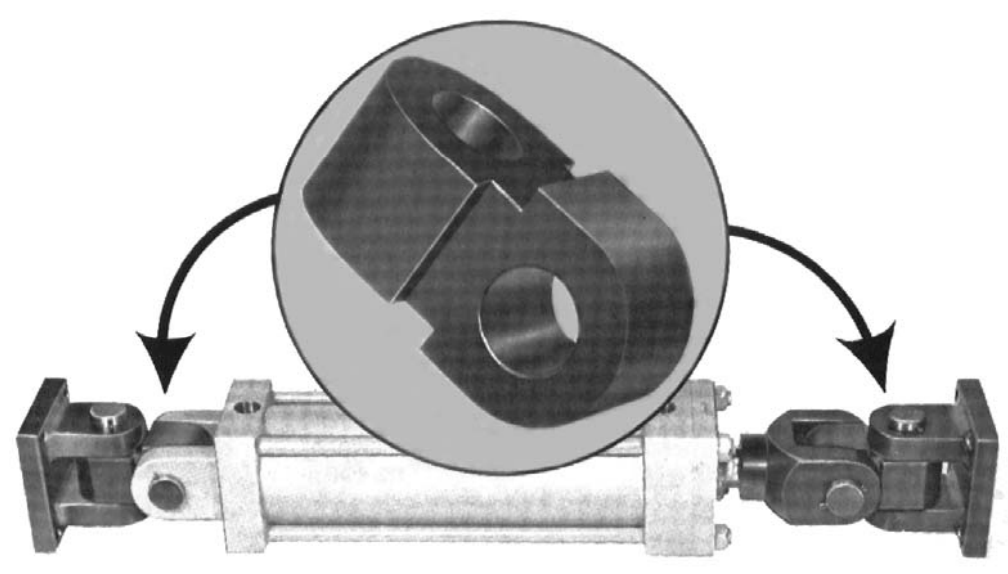

Typical Mechanical Linkages

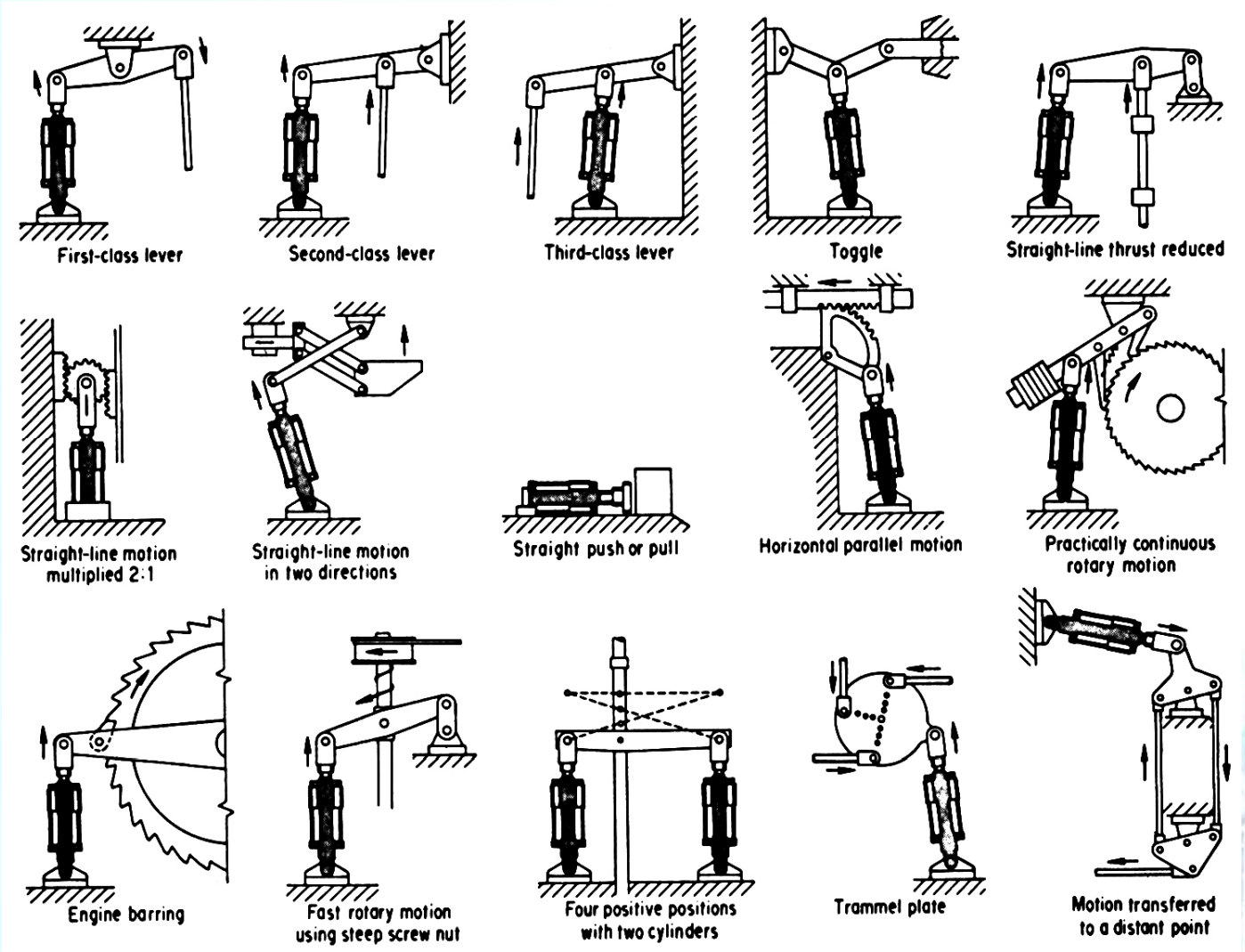

Cylinder Force, Velocity, and Power

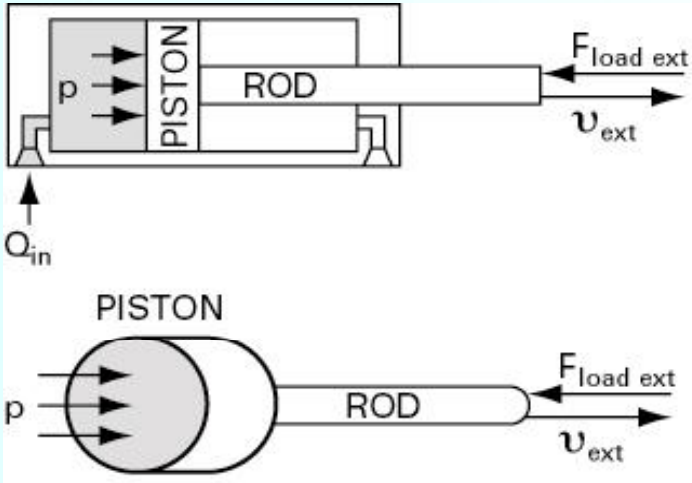

DURING EXTENSION, THE ENTIRE PISTON AREA (A_p) WHICH IS SHOWN SHADED, IS EXPOSED TO FLUID PRESSURE.

(a) EXTENSION STROKE

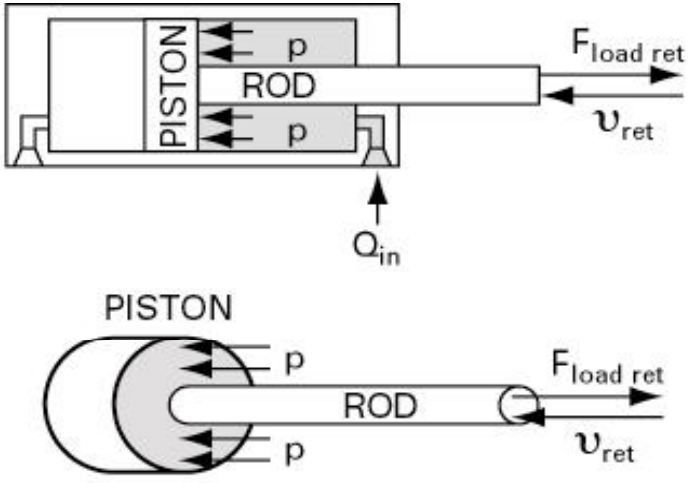

DURING RETRACTION, ONLY THE ANNULAR AREA AROUND THE ROD (A_p-A_r) WHICH IS SHOWN SHADED, IS EXPOSED TO FLUID PRESSURE.

(b) RETRACTION STROKE

$$F_{ext} = p \times A_p$$

$$v_{ext} = \frac{Q_{in}}{A_p}$$

$$F_{ret} = p \times (A_p - A_r)$$

$$v_{ret} = \frac{Q_{in}}{A_p - A_r}$$

Special Cylinders

- **Double-rod Cylinder**
  - **This is typically used when the same task is to be performed at either end.**

- **Telescopic Cylinder**
  - **They are used where long work strokes are required but the full retraction length must be minimized.**

High lift fork truck

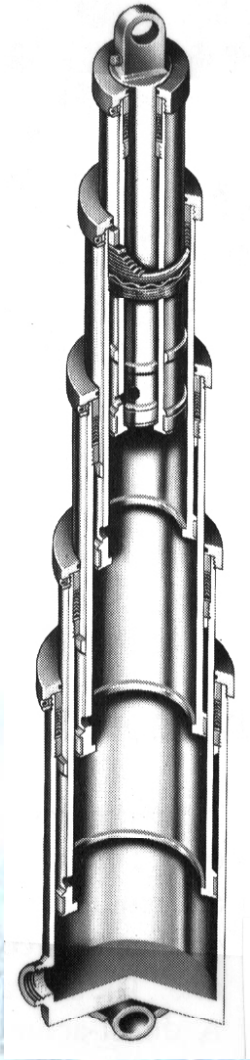

Cylinder loading through mechanical linkages

First-class Lever System

Counterclockwise moment = clockwise moment

- **Fixed hinge**

$$F_{cyl}(L_1 \cos\theta) = F_{load}(L_2 \cos\theta)$$

$$F_{cyl} = \frac{L_2}{L_1} F_{load}$$

- **Clevis mount**

$$F_{cyl}(L_1 \cos\theta \times \cos\phi)$$

$$= F_{load}(L_2 \cos\theta)$$

$$F_{cyl} = \frac{L_2}{L_1 \cos\phi} F_{load}$$

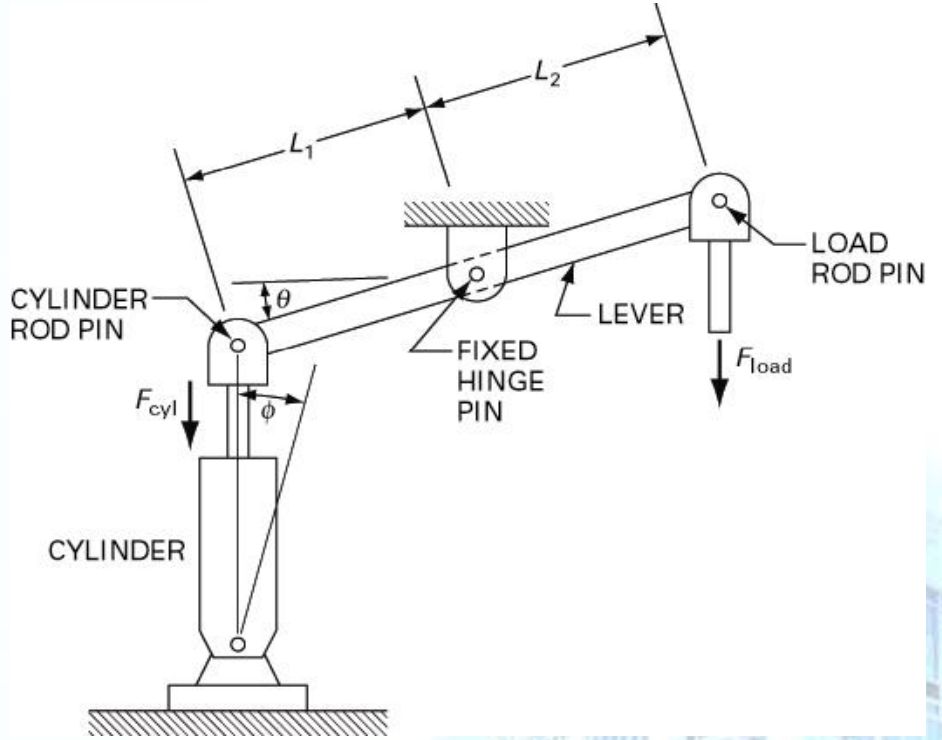

Cylinder loading through mechanical linkages

Second-class Lever System

Counterclockwise moment = clockwise moment

- **Clevis mount**

$$F_{cyl}\cos\phi(L_1+L_2)\cos\theta = F_{load}(L_2\cos\theta)$$

$$F_{cyl} = \frac{L_2}{(L_1+L_2)\cos\phi}F_{load}$$

- **Using a second-class lever rather than a first-class lever reduces the required cylinder piston area for a given application.**

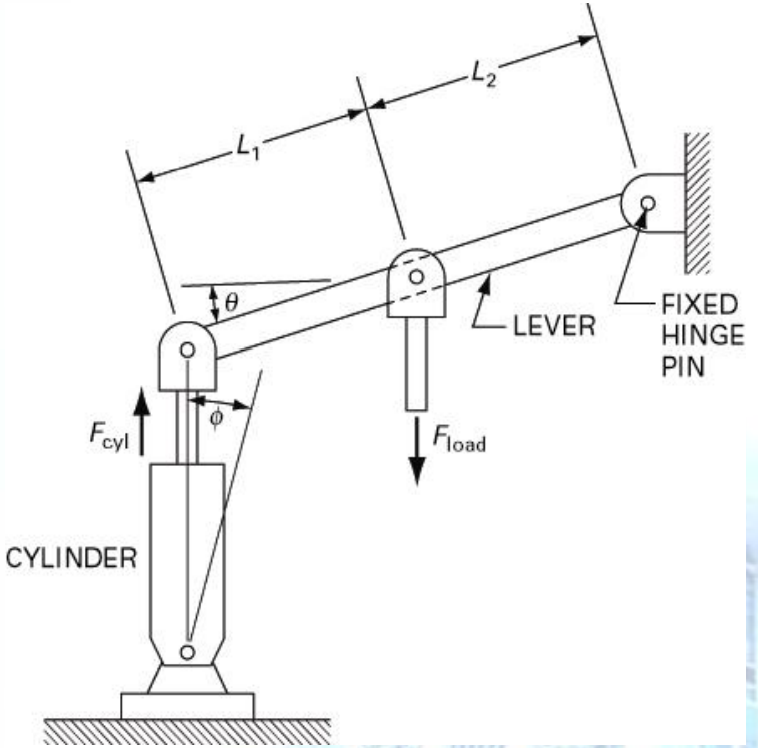

Cylinder loading through mechanical linkages

Third-class Lever System

Counterclockwise moment = clockwise moment

- **Clevis mount**

$$F_{cyl}\cos\phi(L_2)\cos\theta = F_{load}(L_1+L_2)\cos\theta$$

$$F_{cyl} = \frac{L_1+L_2}{L_2\cos\phi}F_{load}$$

- **The third-class lever system can produce a load stroke that is greater than the cylinder stroke, at the expense of requiring a large cylinder diameter.**

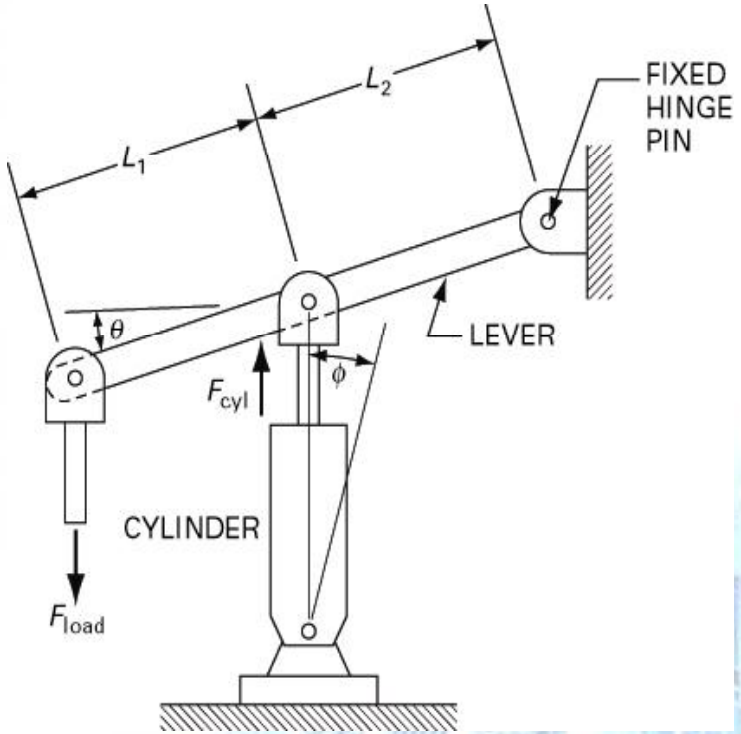

Hydraulic Excavator

건설작업용 유압굴삭기

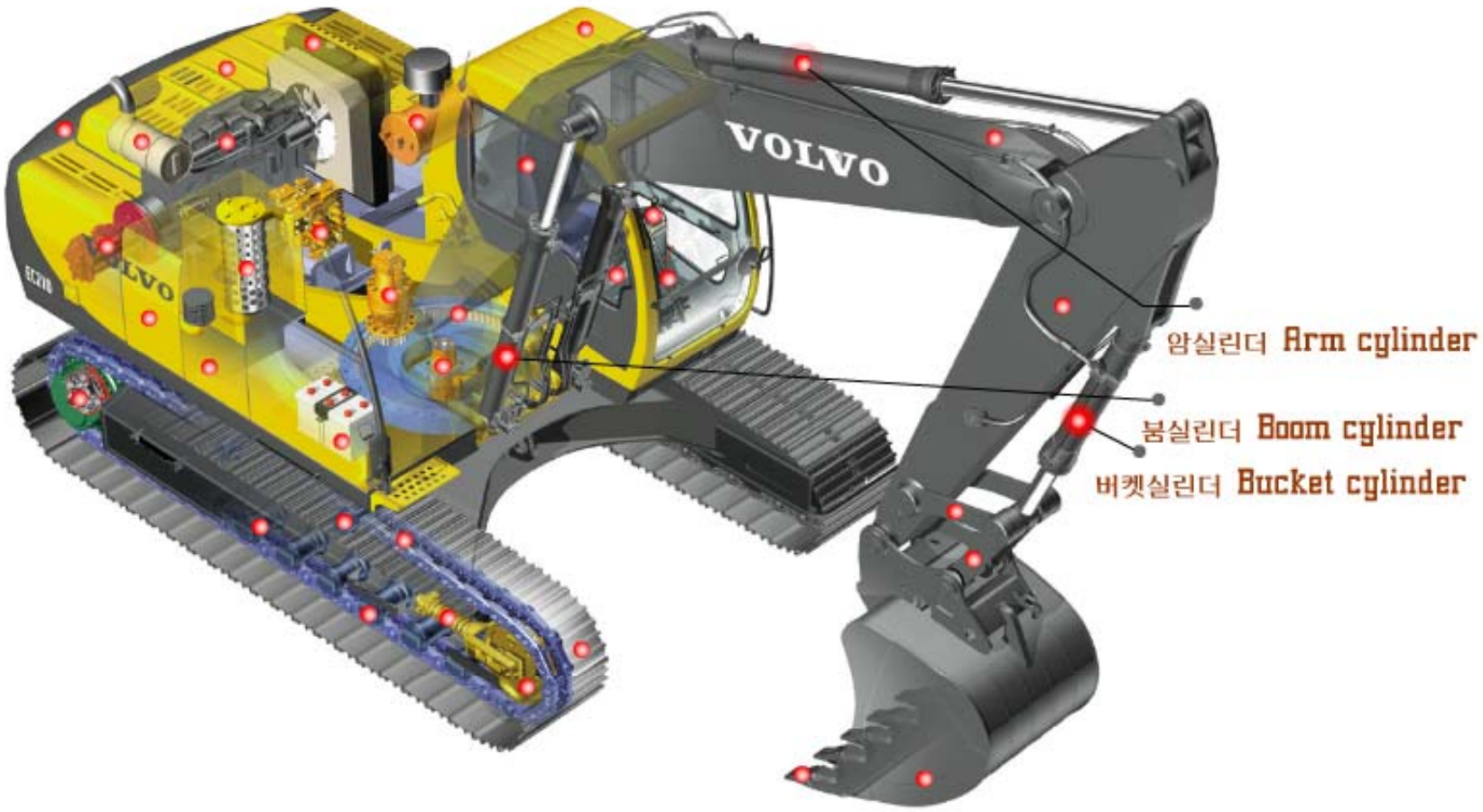
VOLVO
암실린더 Arm cylinder
붐실린더 Boom cylinder
버켓실린더 Bucket cylinder

Operation of cylinder cushions

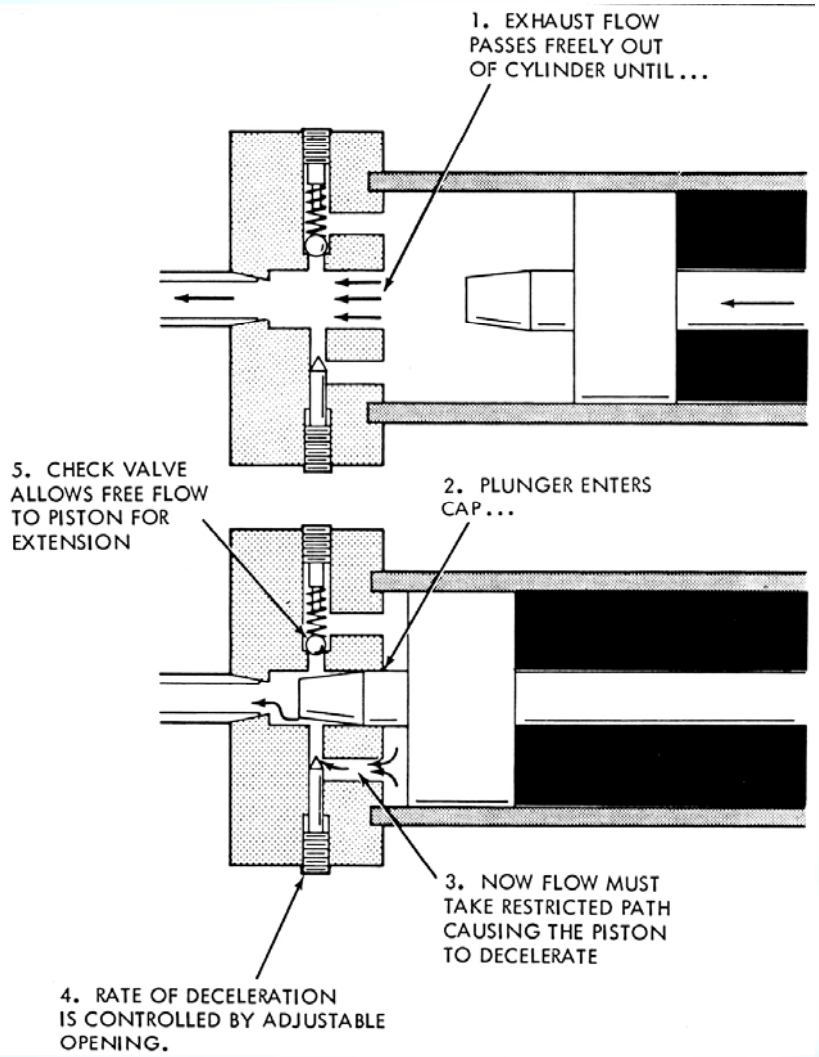

Cylinder Cushions

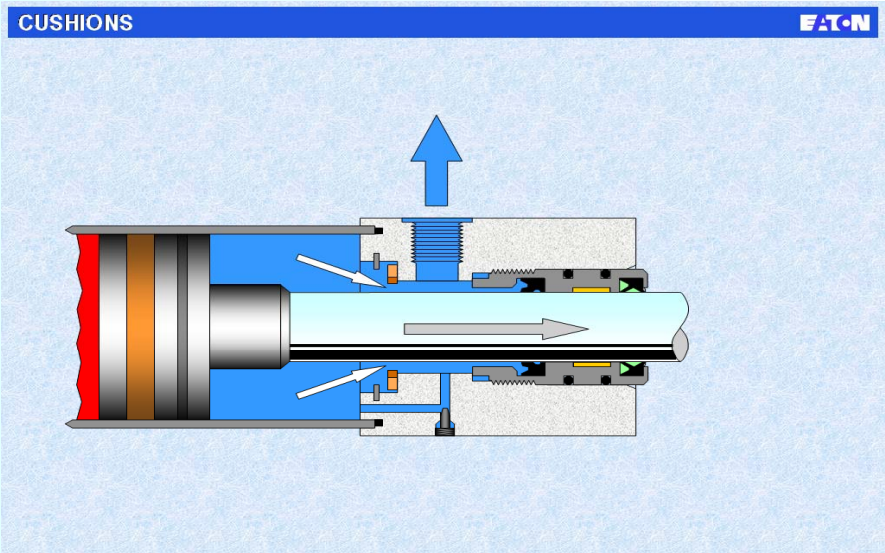

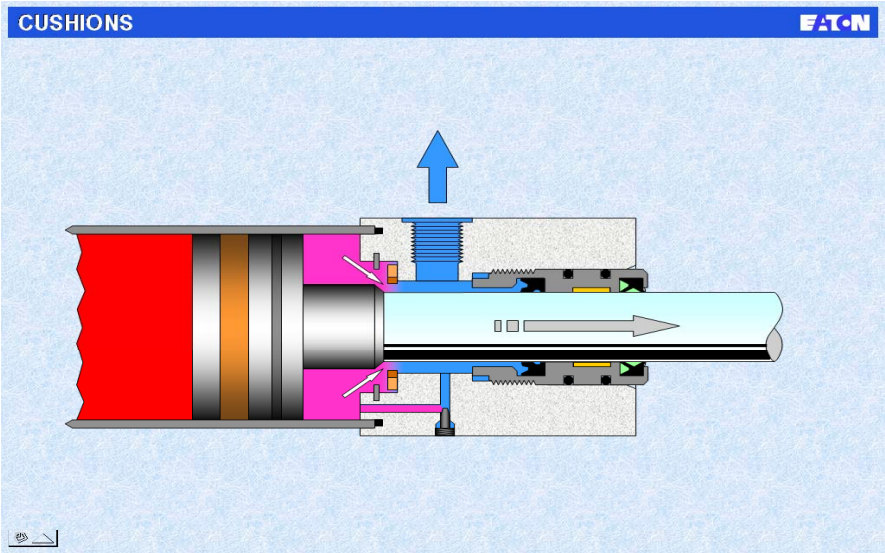

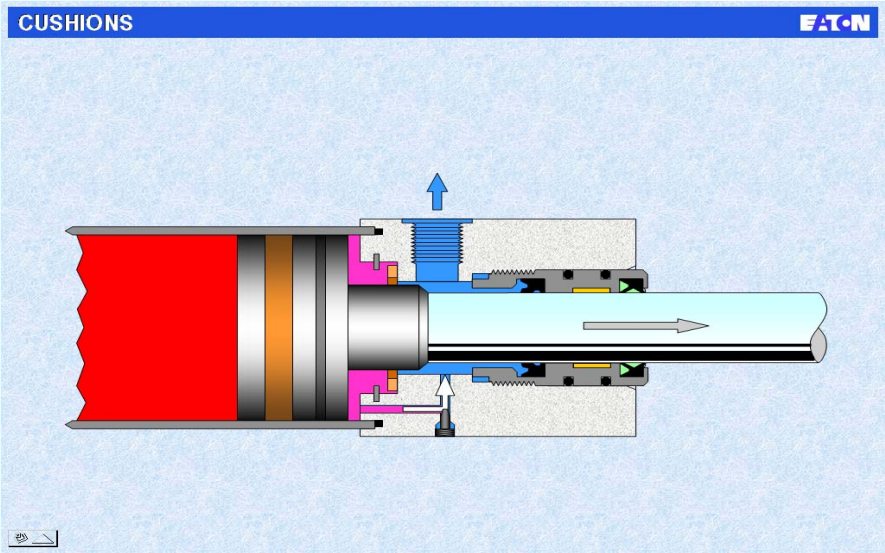

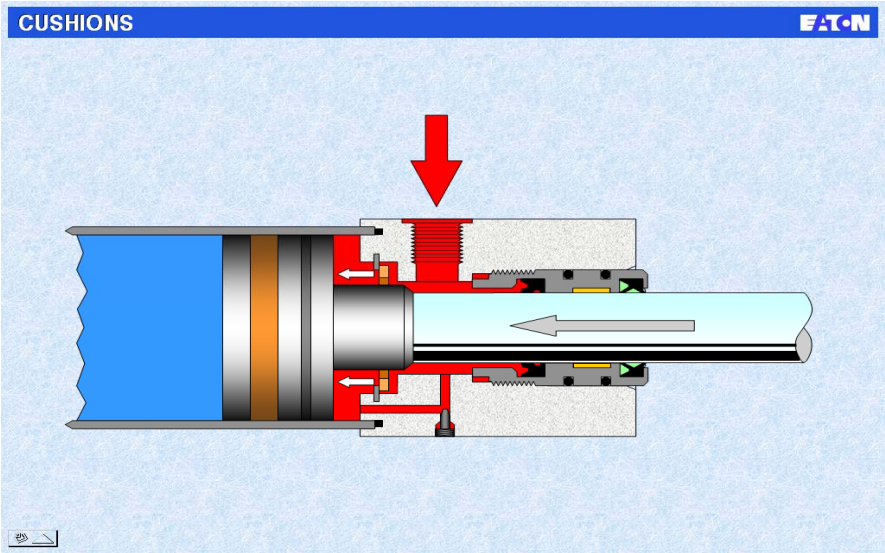

Example: Cylinder cushion problem

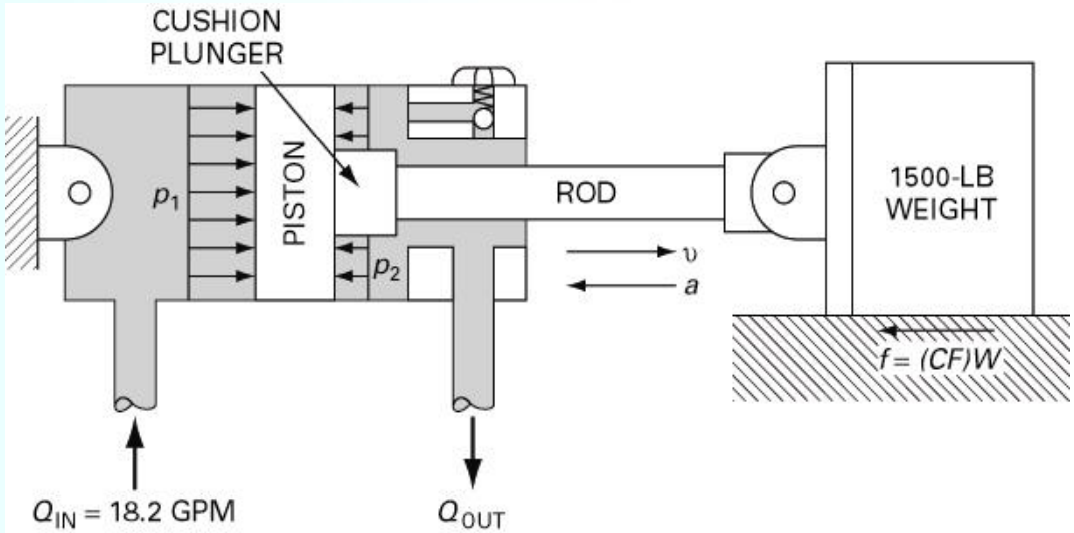

$$Q_{pump} = 18.2\,gpm$$

$$D_{piston} = 3in$$

$$D_{cushion} = 1in$$

$$S_{cushion} = 0.75in$$

$$W_{cylinder} = 1500lb$$

$$P_{relief} = 750\,psi$$

$$C_{friction} = 0.12$$

Hydraulic Shock Absorber

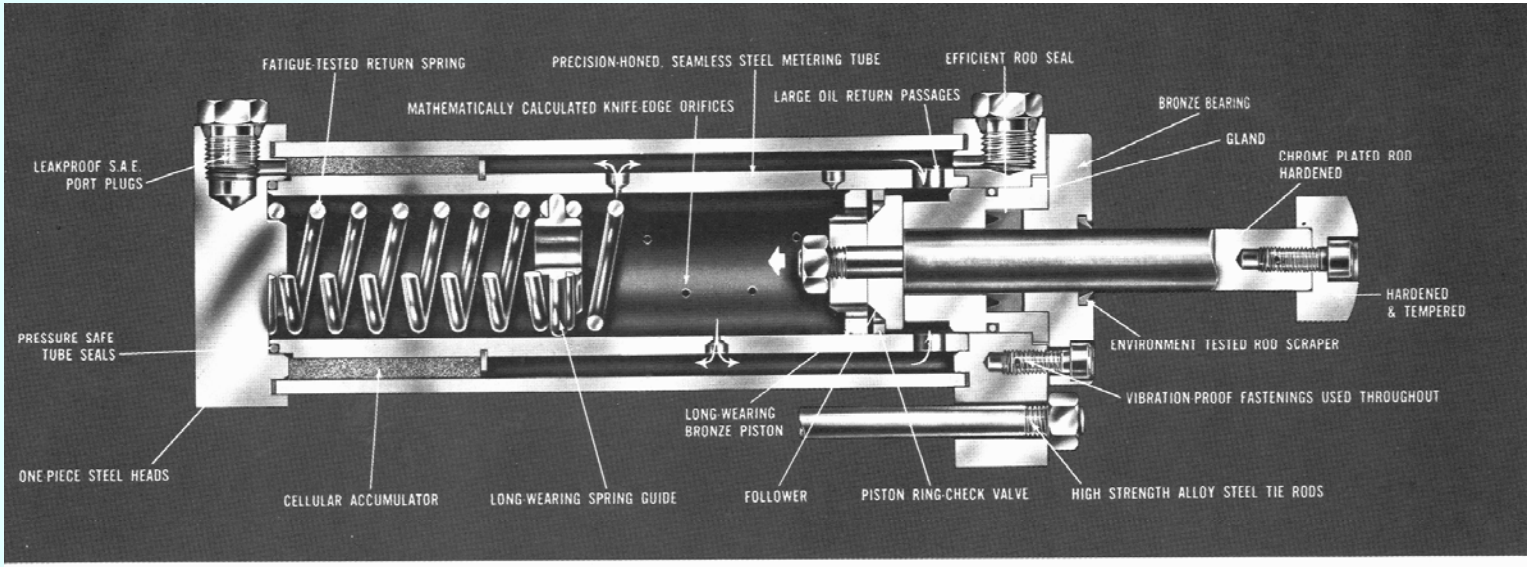

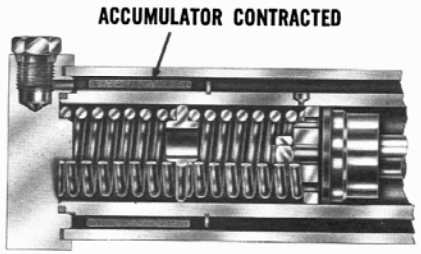

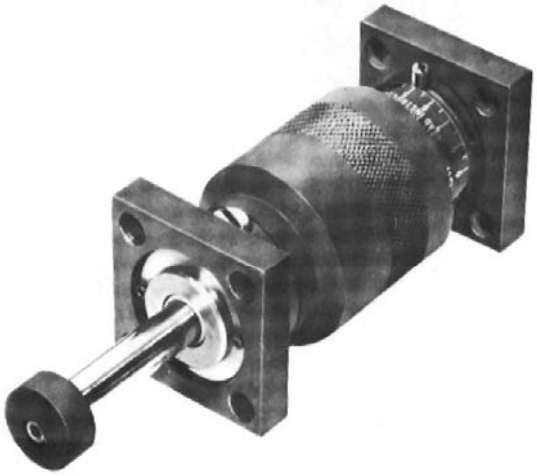

Crane Applications of Hydraulic Shock Absorbers

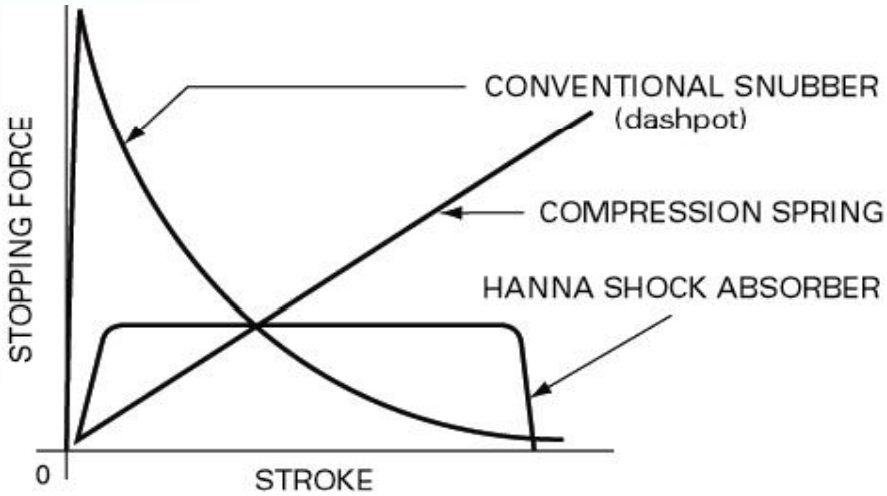

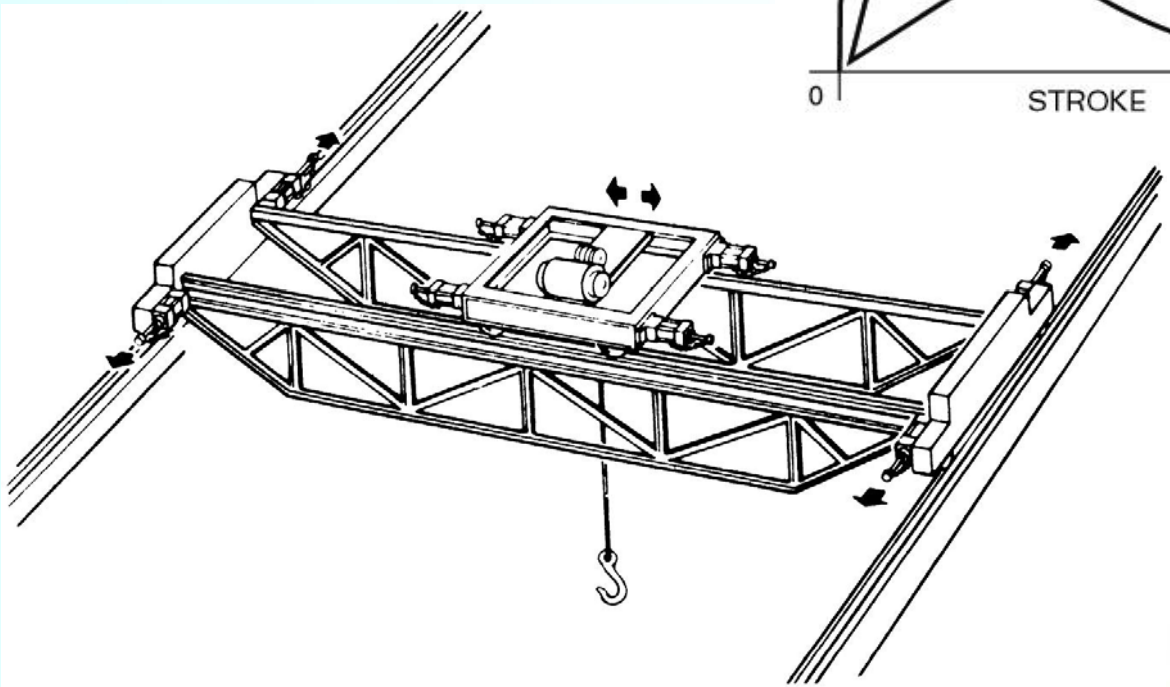

Automotive Application

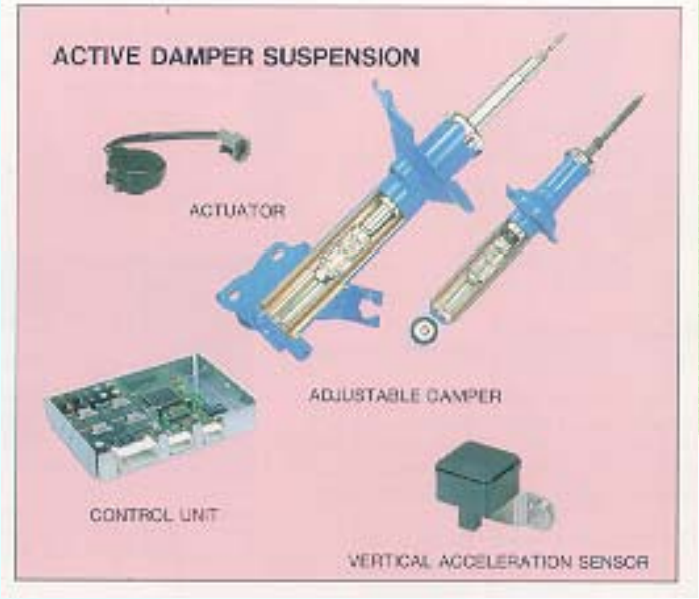

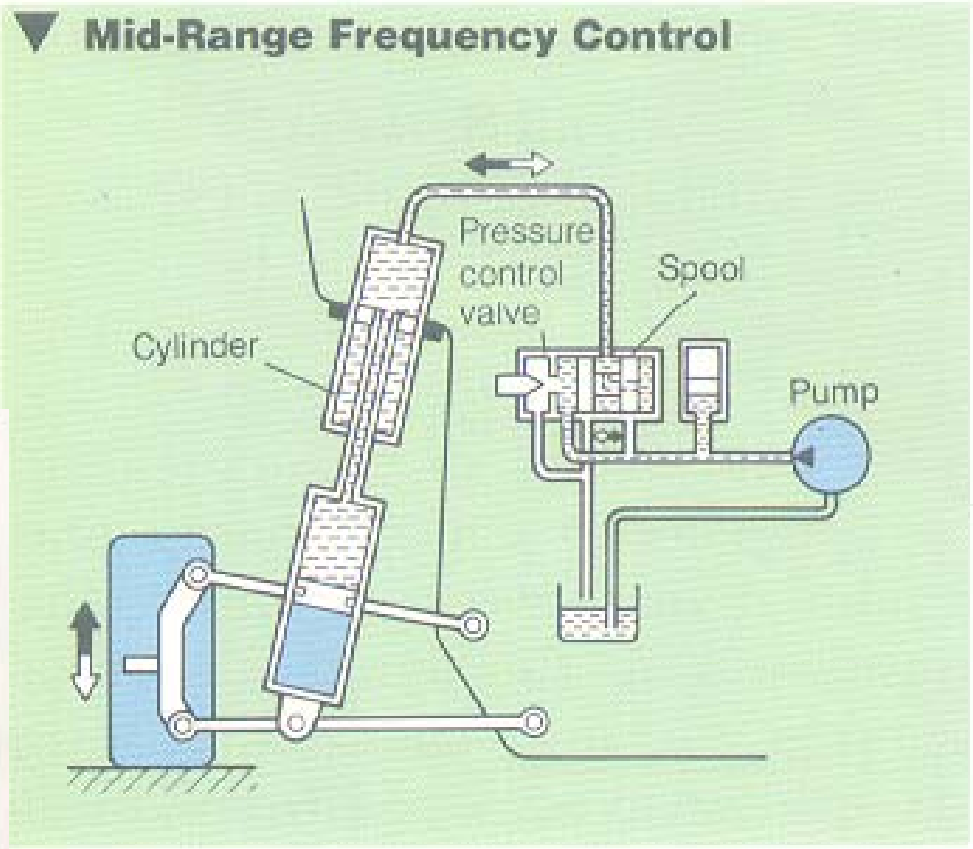

예제 1: 실린더 구동 시스템

- 단로드형 복동실린더를 이용하여 테이블을 구동하고자 한다.
  - 피스톤 직경은 **150mm,** 로드 직경은 **85mm**이다.
  - 피스톤 속도 **12m/min ,** 가속시간은 **0.4s** 이다 **.**
  - 실린더 배압은 **5** kgf/cm^2 이다.
  - 피스톤행정은 **1000mm**이다
  - 테이블의 중량은 **1 ton,** 마찰계수는 **0.22** 이다.
  - 실린더의 압력효율은 **90%**이다.

위의 조건에서 테이블을 전진시키는데 필요한 압력과 유량을 구하라.

(1) 압력 **p**

(2) 소요유량 **Q**

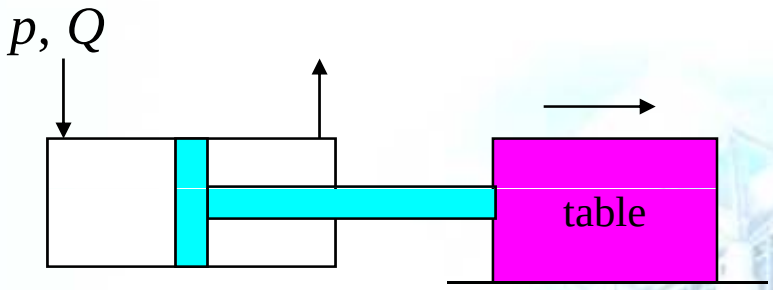

[답] (1) 5.48 kgf/cm^2

(2) 211.9 l/min

예제 2: 실린더 구동 시스템

- 압력보상밸브를 설치한 **meter-in** 회로를 이용하여 실린더의 속도를 제어하는 시스템이 있다.
  - 피스톤 직경은 **60mm,** 로드 직경은 **25mm**이다.
  - 피스톤 부하와 마찰력의 크기는 회로도와 같다.
  - 펌프의 용량은 **20 ml/rad,** 회전수는 **1000rev/min**이다.
  - 펌프의 체적효율은 **92%,**기계효율은 **80%**이다.

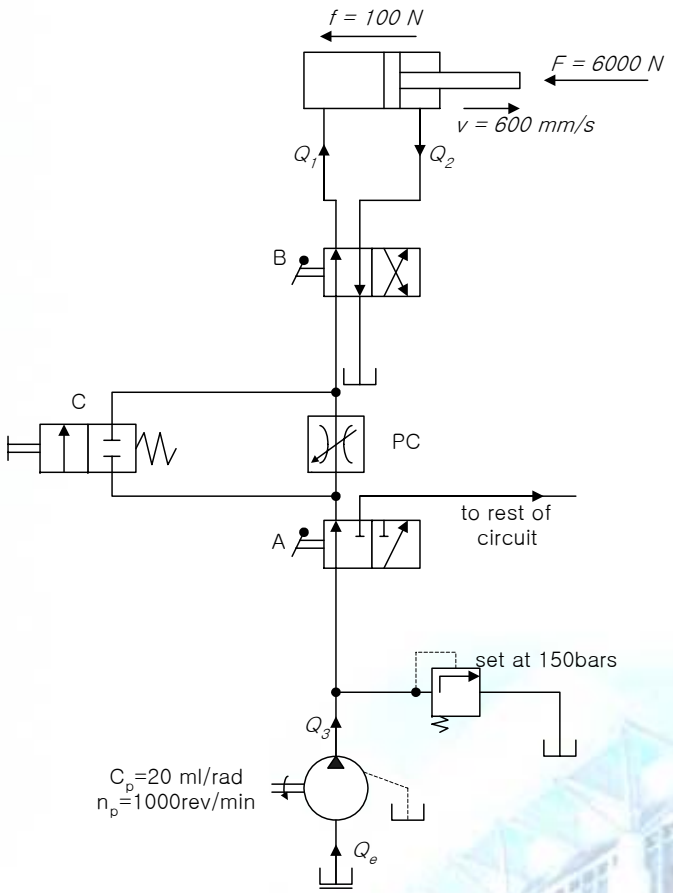

전진동작의 정상상태에서,

(1) 펌프구동에 필요한 동력 L_{in} 과

(2) 회로의 전효율 η 를 구하라.

[답] (1) 39.4 KW (2) 9 %

Basic Modeling of Dynamic Cylinder

Generalized Flow - Continuity equation

$$Q_1 - 0 = \frac{dV_1}{dt} + \frac{V_1}{\beta_e}\frac{dP_1}{dt}$$

$$0 - Q_2 = \frac{dV_2}{dt} + \frac{V_2}{\beta_e}\frac{dP_2}{dt}$$

+ 부호를 그림과 같이 설정하고, 위의 식을 단순화함.

$$Q_1 = A_1 u + \frac{V_1}{\beta_e}\frac{dP_1}{dt} \qquad -Q_2 = -A_2 u + \frac{V_2}{\beta_e}\frac{dP_2}{dt}$$

Equation of motion

$$P_1 A_1 - P_2 A_2 = m\frac{dv}{dt} + bv + f_L$$

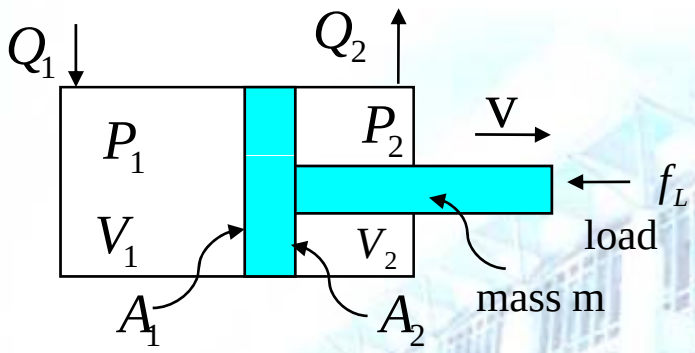

Report

- **Text Problems**
  - **6-17**
  - **6-26**
- **Due date: 2주후**