2009 fall

Advanced Physical Metallurgy

"Phase Equilibria in Materials"

11. 17. 2009

Eun Soo Park

Office: 33-316
Telephone: 880-7221
Email: espark@snu.ac.kr
Office hours: by an appointment

Contents for previous class "Ternary Phase diagram"

Ternary isomorphous system

: Two-phase equilibrium between the liquid and a solid solution

How to show in 2-dim. space?

① Projection (liquidus & solidus surface)

→ No information on 2 phase region

② Isothermal section → most widely used → F = C - P

Rules for tie line

(i) Slope gradually changes.
(ii) Tie lines cannot intersect.
(iii) Extension of tie line cannot intersect the vertex of triangle.
(iv) Tie lines at T's will rotate continuously.

Konovalov's Rule: $X_A^S > X_A^l$ when addition of A increases the T_m.

③ Vertical section

Useful for effect of 3rd alloying element

However, it is not possible to draw horizontal tie lines across two-phase regions in vertical sections to indicate the true compositions of the co-existing phases at a given temperature.

8.4.2 Variants of the phase diagram
(more complex system)

Ternary <u>two-phase equilibrium</u> with a saddle point

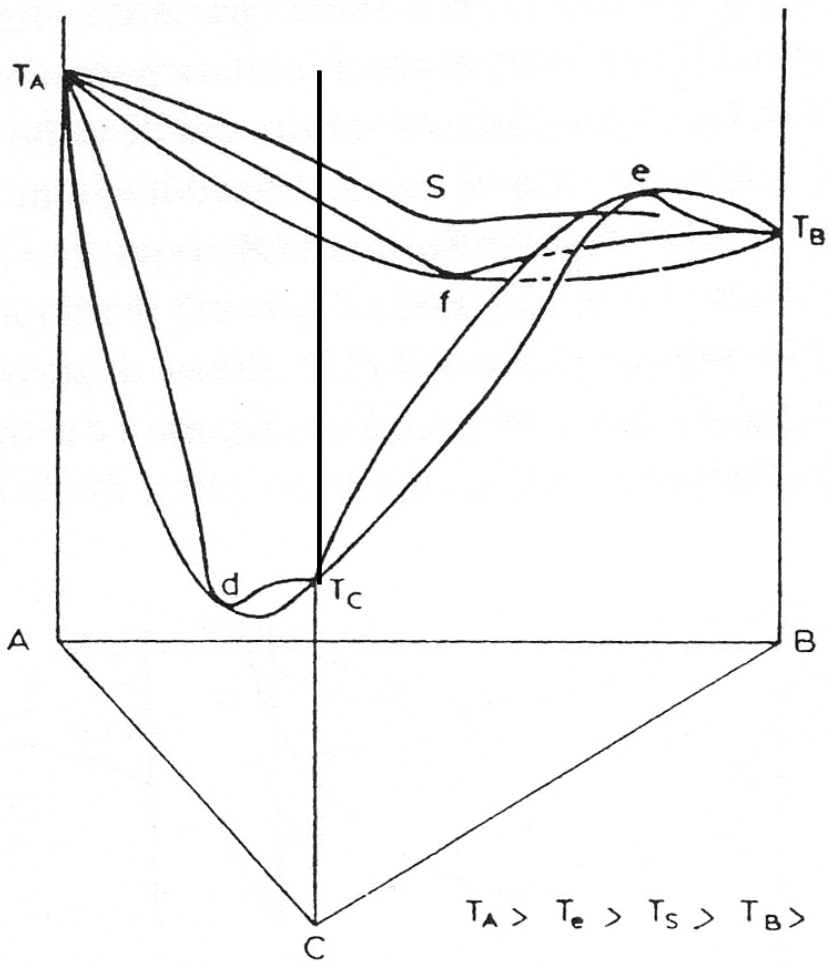

$T_A > T_e > T_S > T_B > T_f > T_C > T_d$

S : saddle pt. where liquidus & solidus surfaces meet

Isothermal section ($T=T_s$)

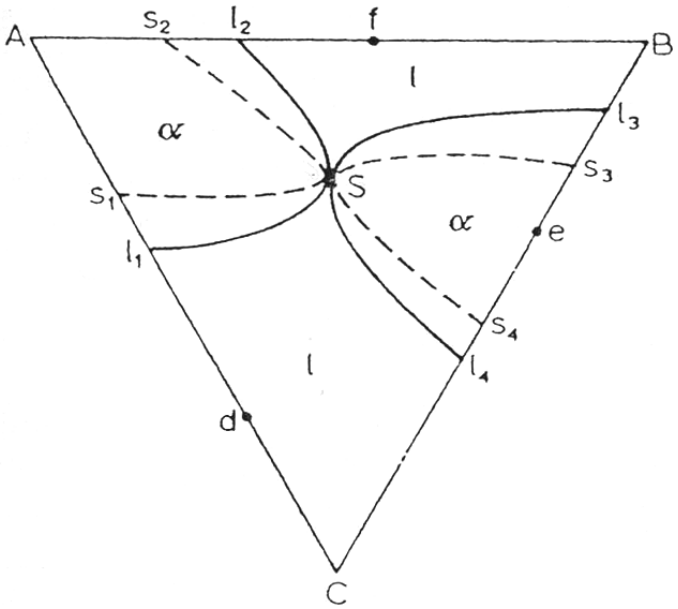

Projection of liquidus isotherms

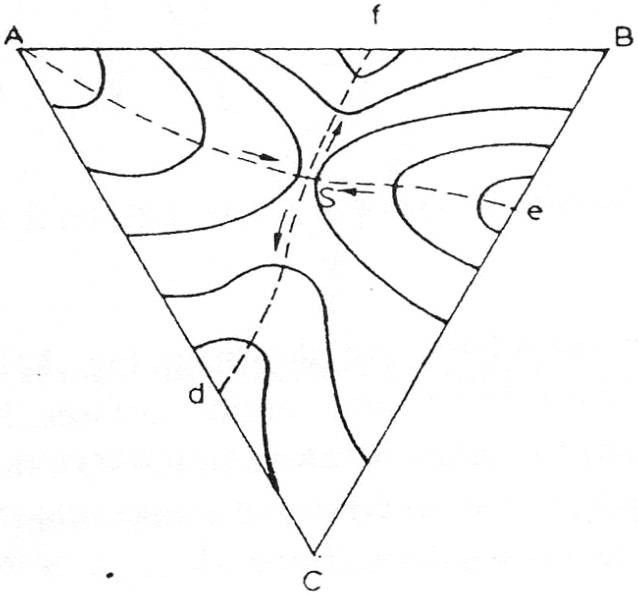

8.4.2 Variants of the phase diagram
(more complex system)

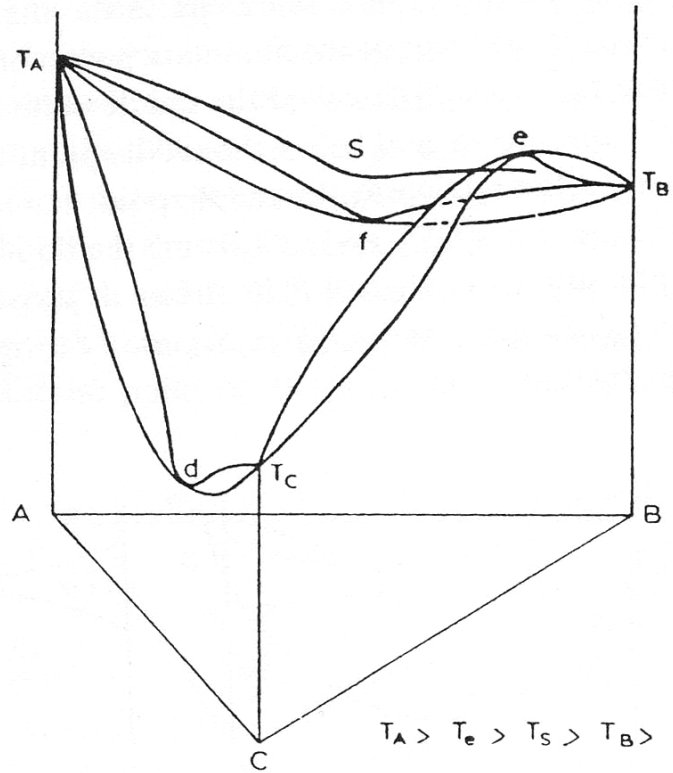

$T_A > T_e > T_S > T_B > T_f > T_C > T_d$

Vertical sections

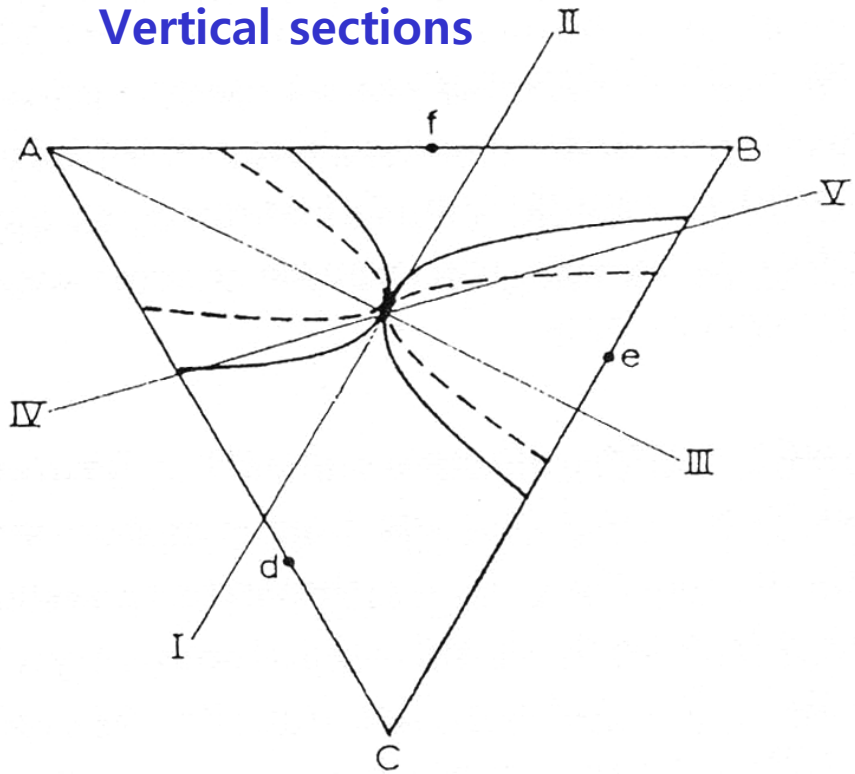

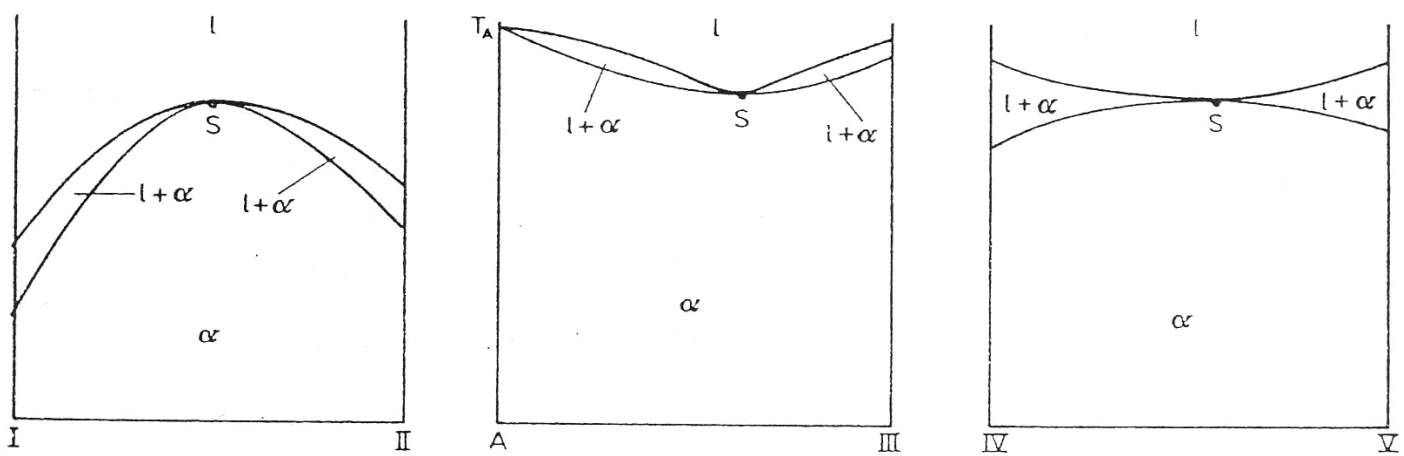

8.4 TWO-PHASE EQUILIBRIUM

8.4.3. Two-phase equilibrium between solid or liquid solutions: $\alpha_1 \rightleftarrows \alpha_2$ or $l_1 \rightleftarrows l_2$

Miscibility gap

$\varepsilon > 0$, $\Delta H_{mix} > 0$

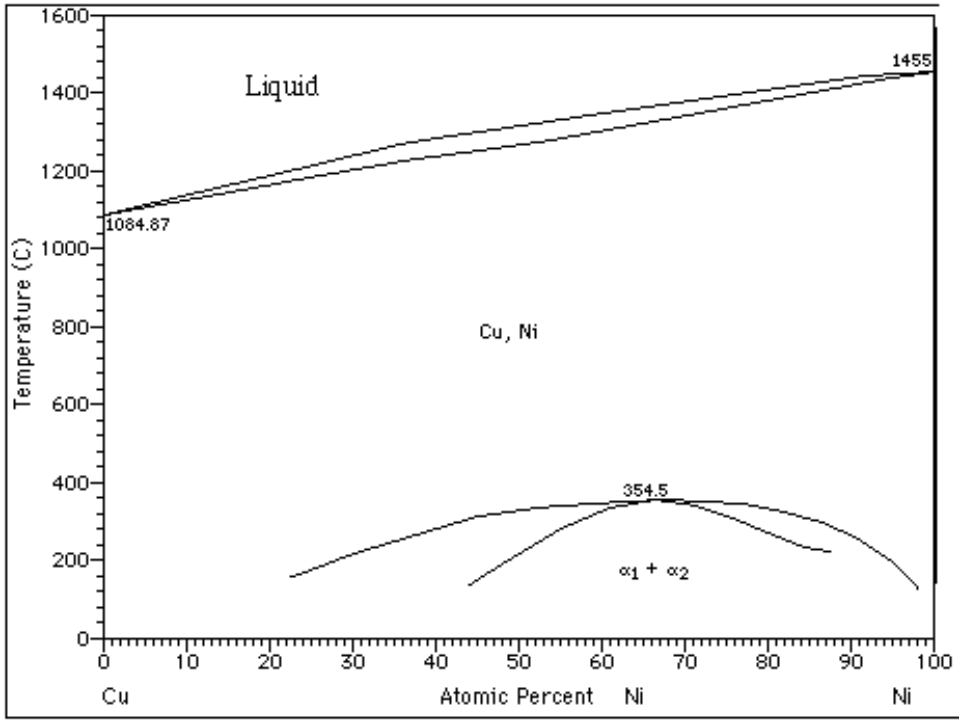

$\Delta H_{mix} \sim +26$ kJ/mol

$\varepsilon >> 0$, $\Delta H_{mix} >> 0$

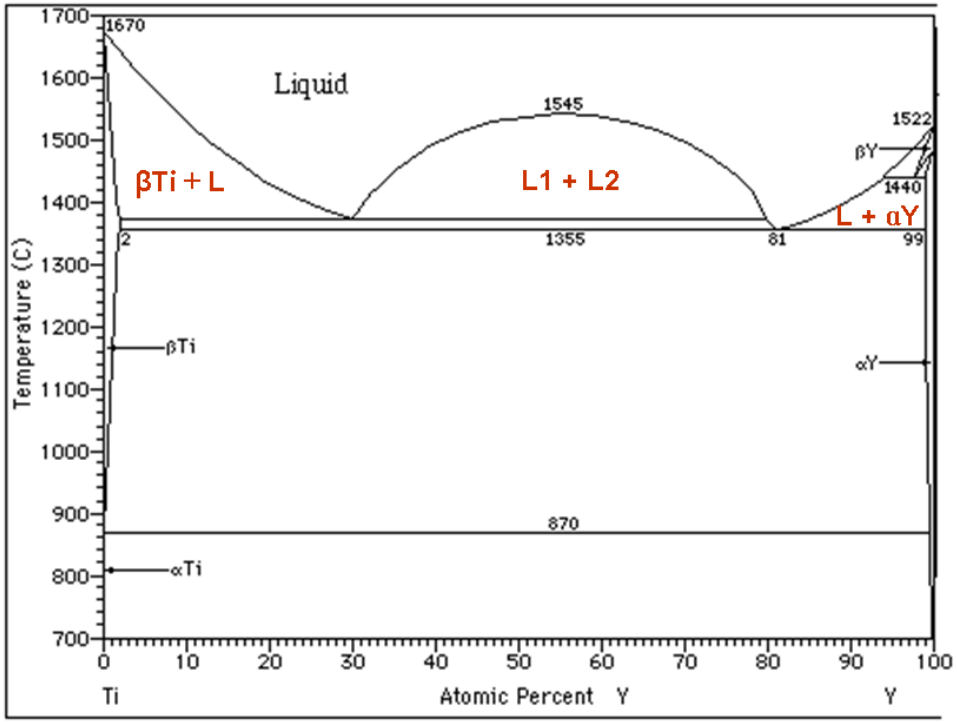

$\Delta H_{mix} \sim +58$ kJ/mol

8.4 TWO-PHASE EQUILIBRIUM

8.4.3. Two-phase equilibrium between solid or liquid solutions: $\alpha_1 \rightleftarrows \alpha_2$ or $l_1 \rightleftarrows l_2$

Miscibility gap

- **A ternary system with a closed miscibility gap associated with a binary critical point c_1**
  - **effect of temperature**

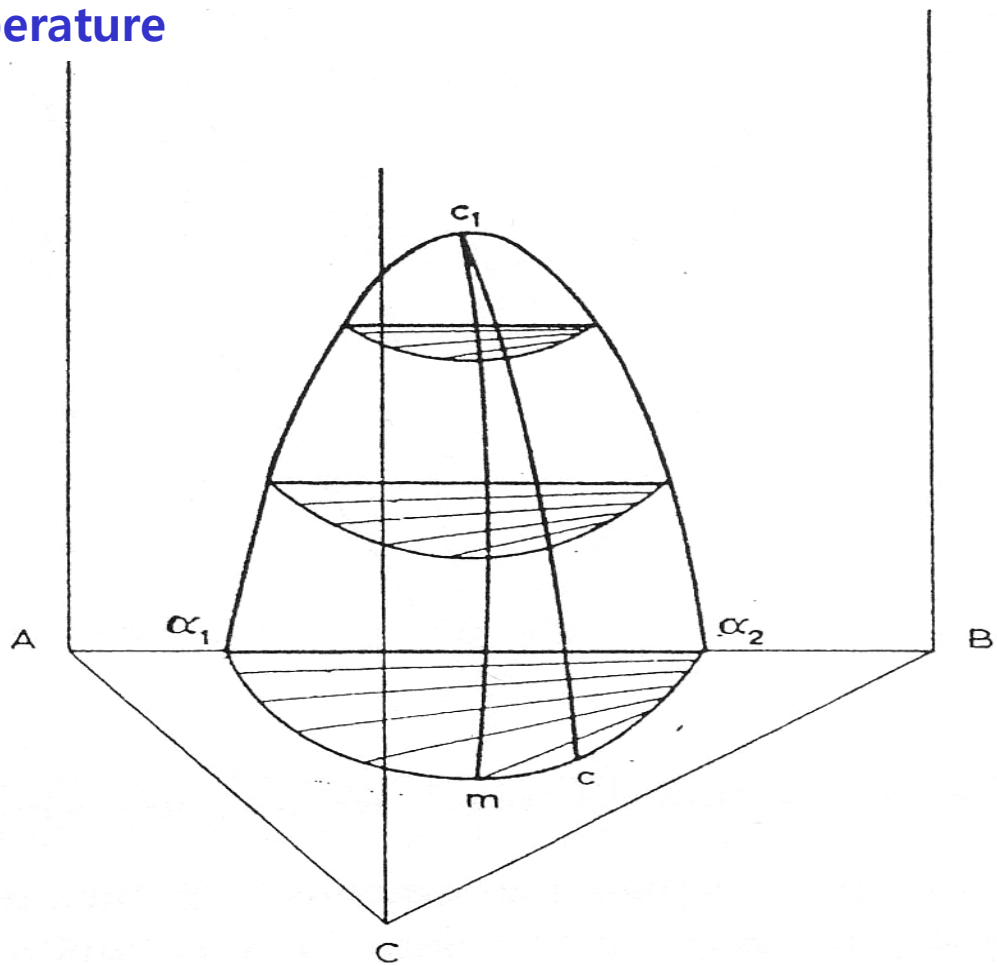

8.4 TWO-PHASE EQUILIBRIUM

8.4.3. Two-phase equilibrium between solid or liquid solutions: $\alpha_1 \rightleftarrows \alpha_2$ or $l_1 \rightleftarrows l_2$

Miscibility gap

- **A ternary system with only a binary critical point**

  - **Isothermal section at room temp.**

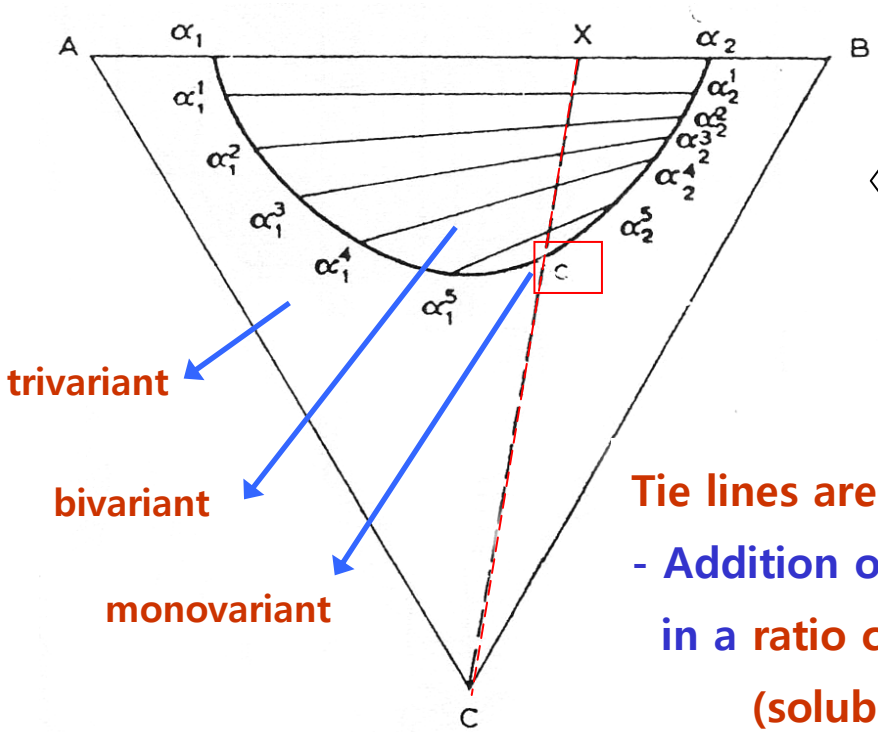

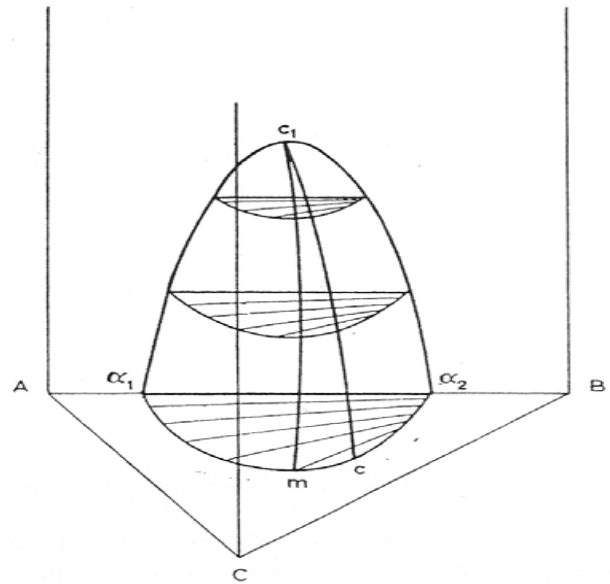

Tie lines are not parallel to the binary tie line.

- **Addition of C to a heterogeneous mixture of A & B in a ratio corresponding to the distribution of C (solubility)**

C : critical point

(Max. point ≠ critical point in most cases)

8.4.3. Two-phase equilibrium between solid or liquid solutions: $\alpha_1 \rightleftarrows \alpha_2$ or $l_1 \rightleftarrows l_2$

(a) Transformation in alloy X on cooling from the $\alpha_{1(2)}$ phase region

(b) Changes in composition of the co-exisitng α_1 and α_2 phases

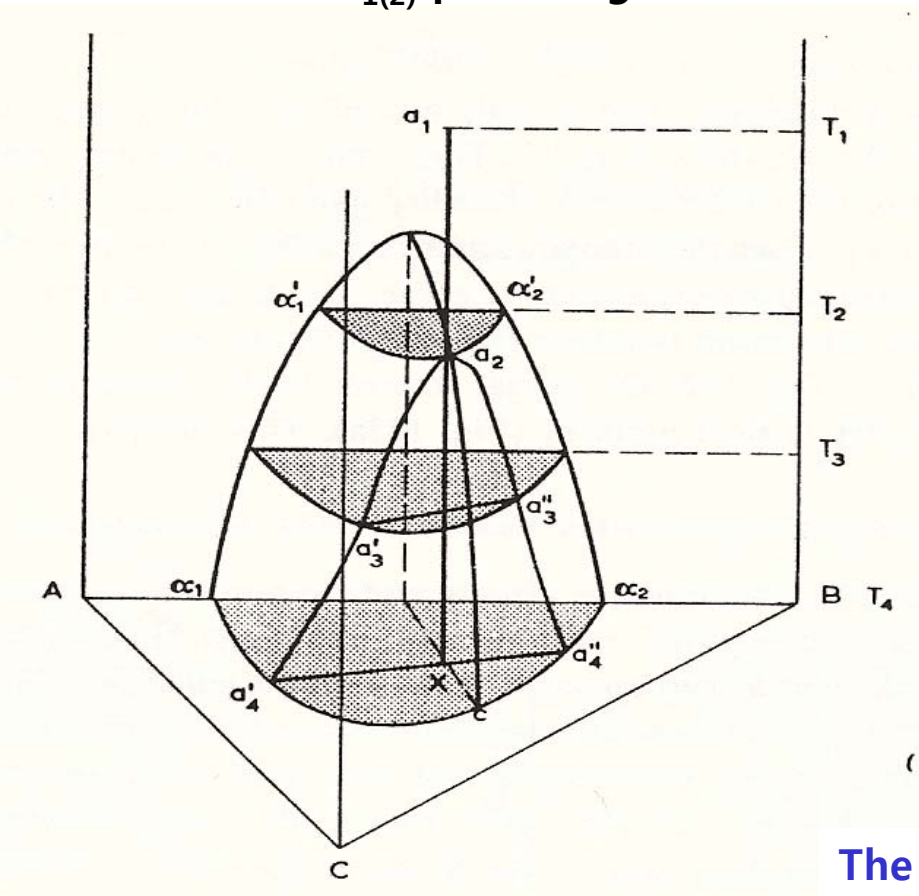

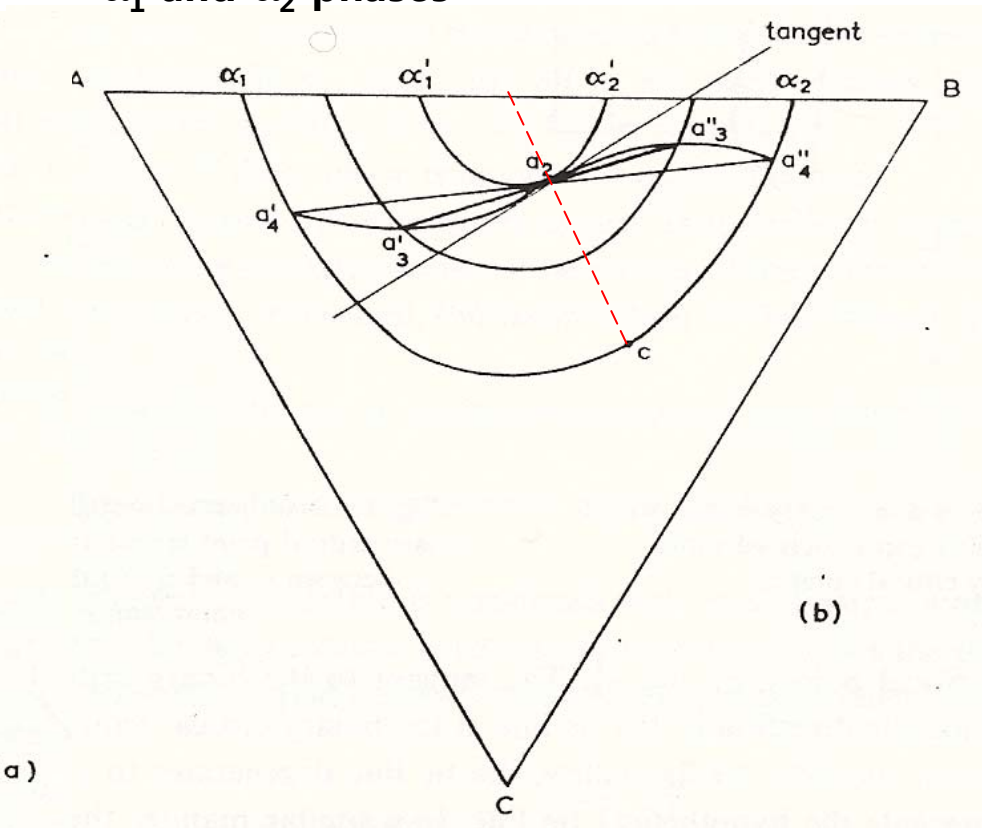

The course of the curves is defined by the relative position of the tie lines which skew round towards the side AB as the temperature decreases.

➡ Curves changes along a line which is tangential to the solubility curve

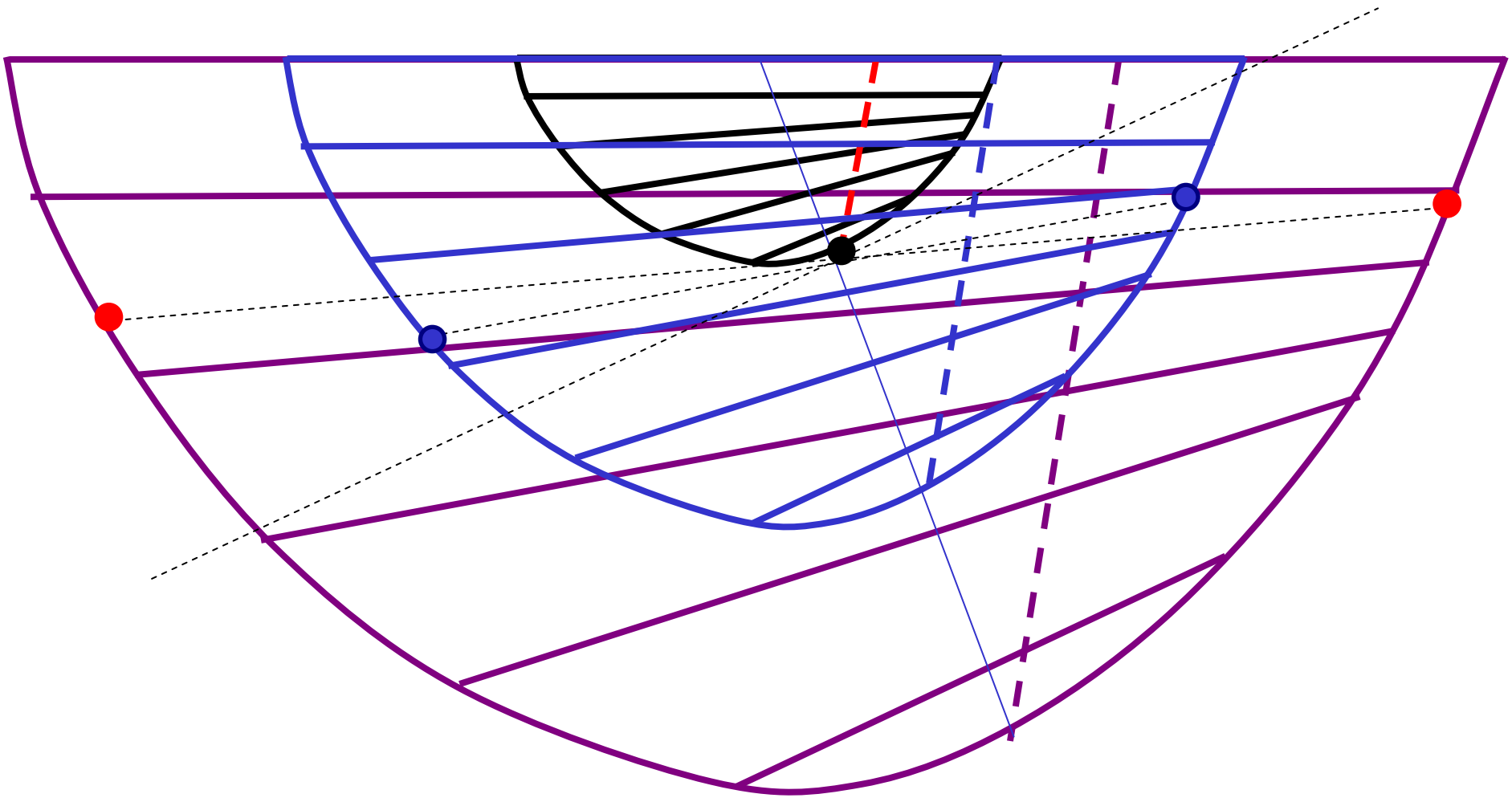

- **A ternary system with a binary and a ternary critical point**

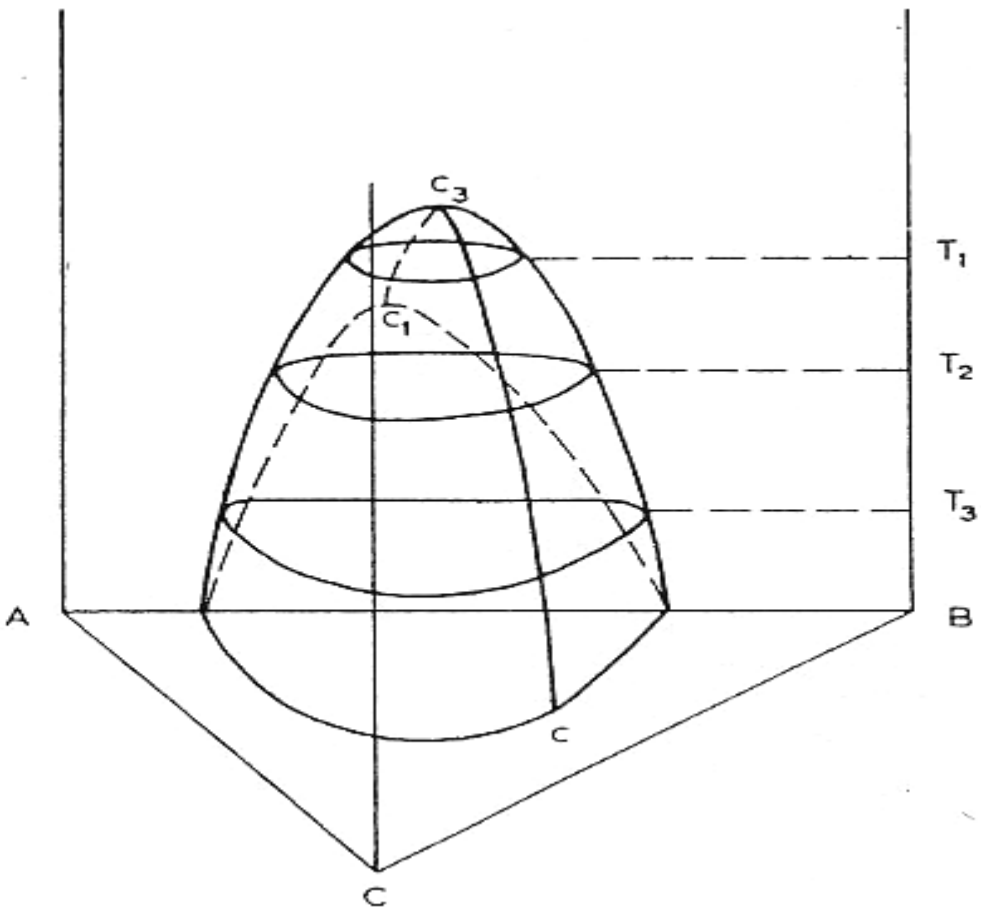

Isotherms

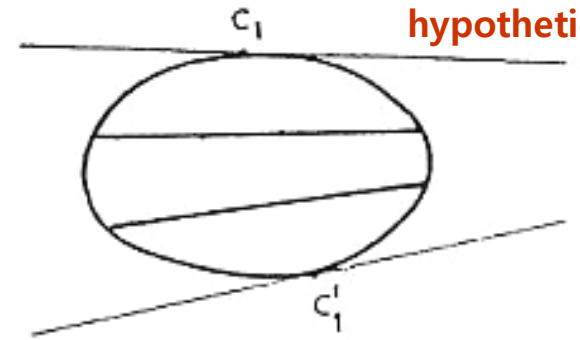

(a) The binary critical point temperature

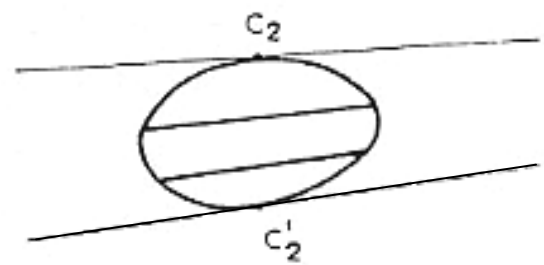

(b) A temperature between c_1 and c_3

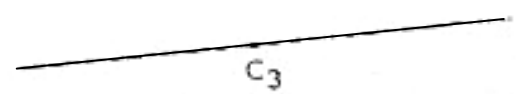

(c) The ternary critical point temperature

- **A ternary system with two miscibility gaps**

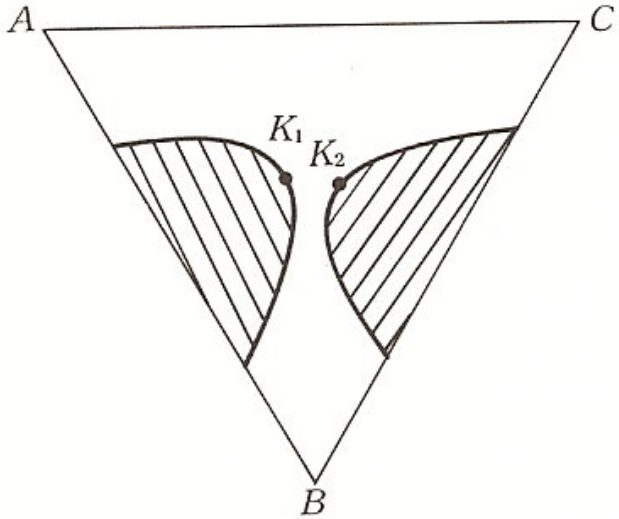

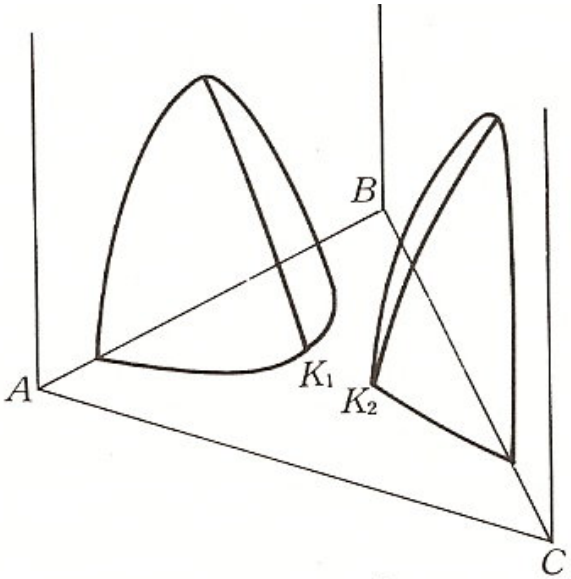

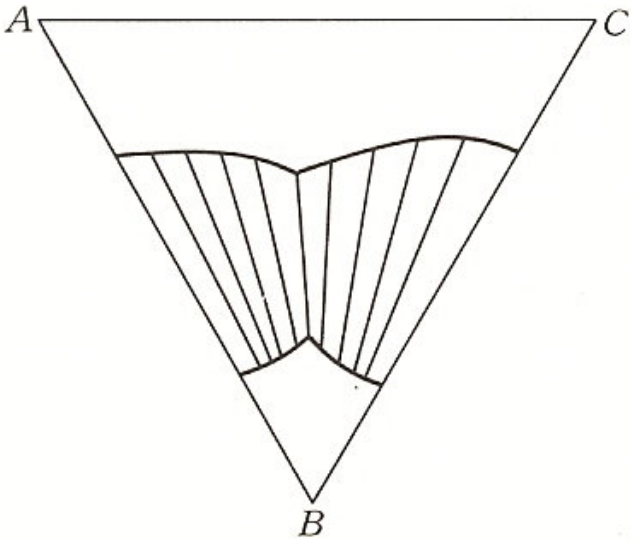

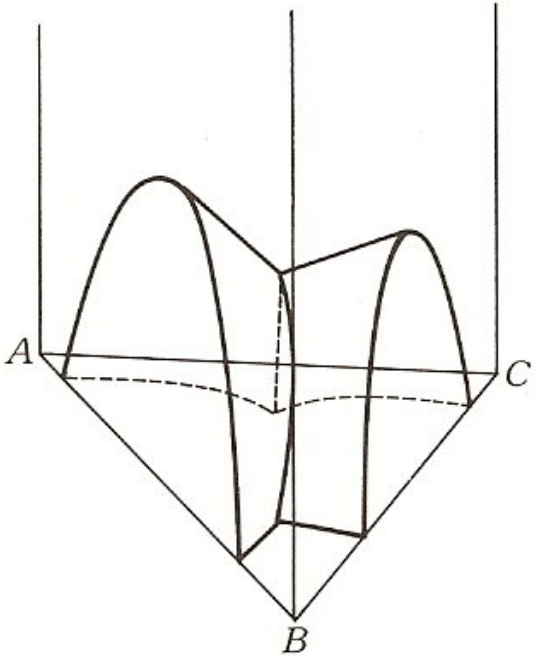

- **A ternary system with three miscibility gaps**

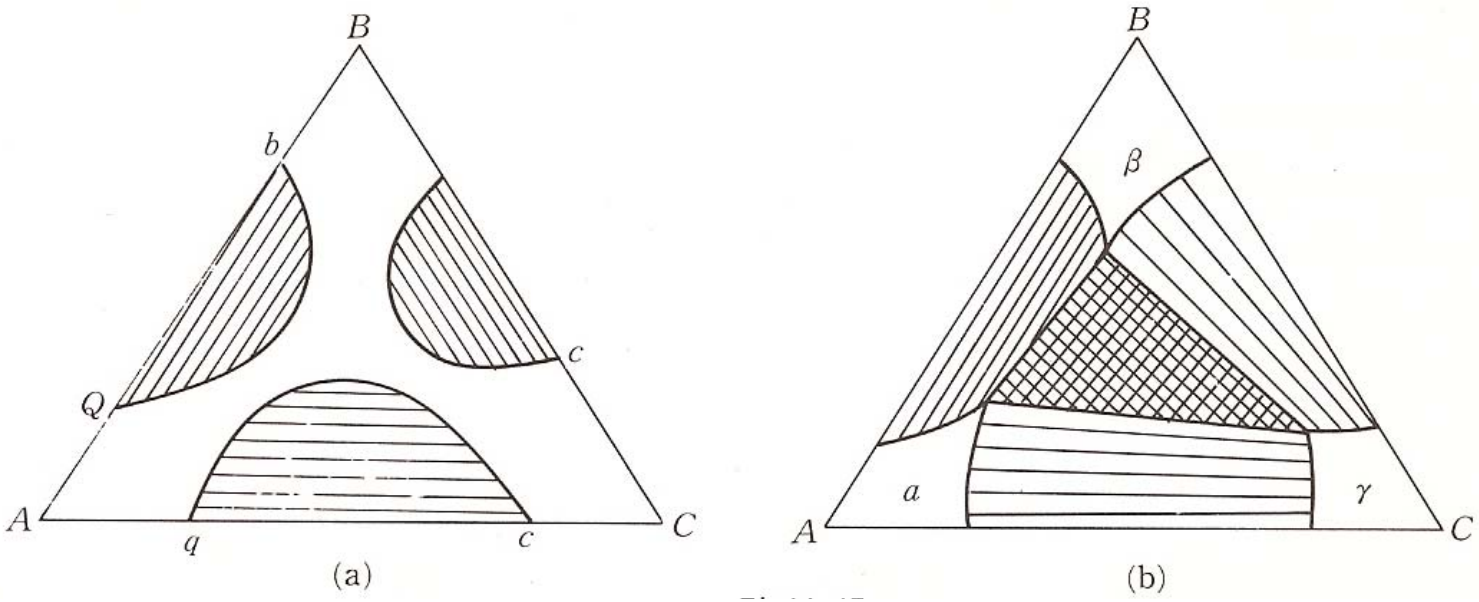

- **A ternary system with miscibility gap in three component region**

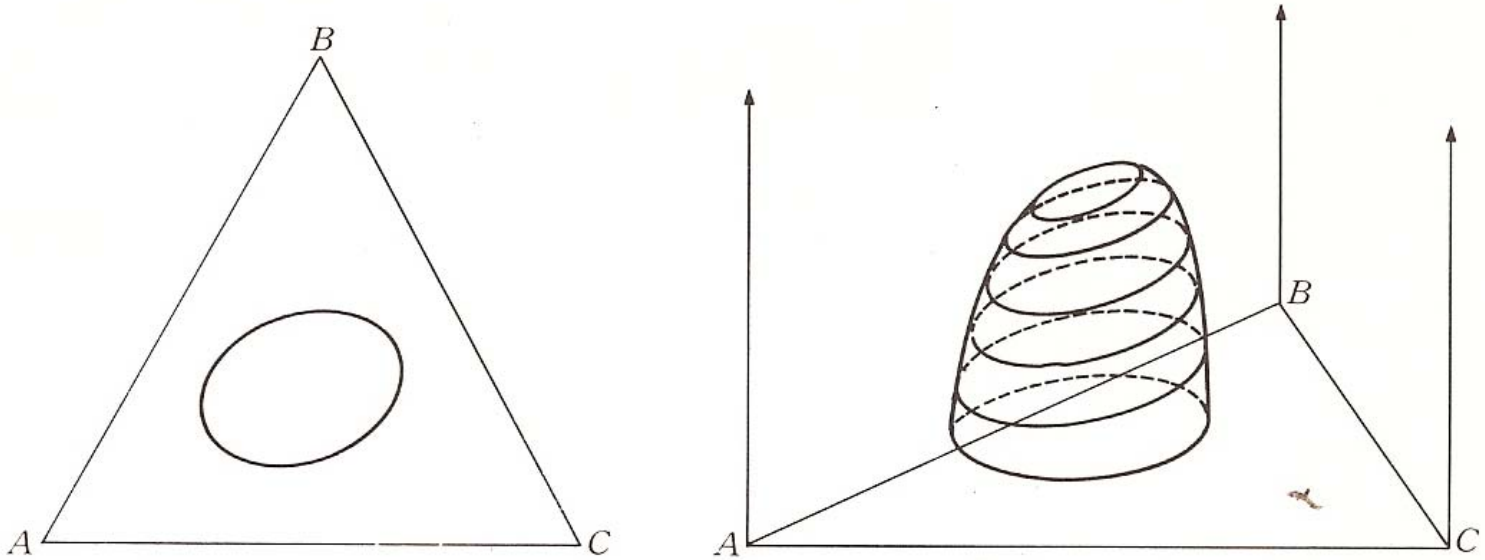

Chapter 9. Ternary phase Diagrams

Three-Phase Equilibrium

9.1. PROPERTIES OF THREE-PHASE TIE TRIANGLES

Two phase equil. (*f* = 2)
- ideal system
- liquidus max. (min)
- miscibility gap

Three phase equil. (f = 1)

- **Tie triangle**

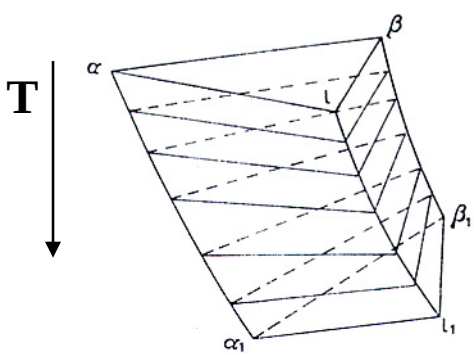

① vertex of tie triangle

→ composition of three phases

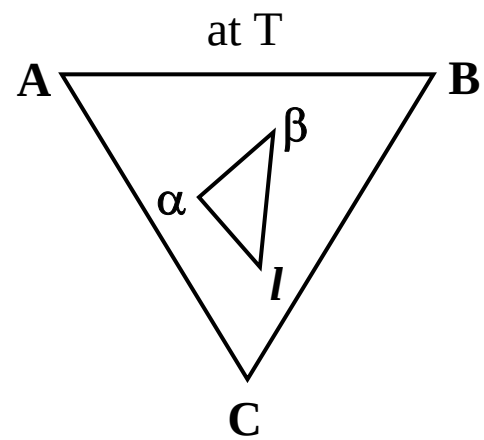

cf) *n* phase region is surrounded by *n*±*1* phase region

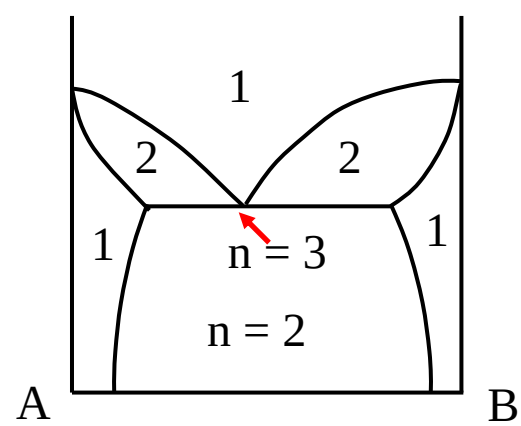

9.1. PROPERTIES OF THREE-PHASE TIE TRIANGLES

② tie triangle will be surrounded by 2 phase region

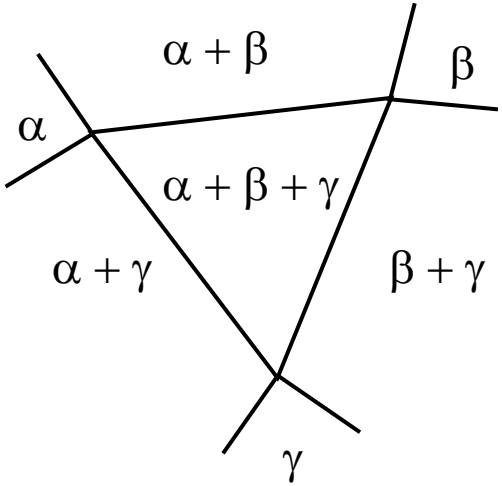

④ rule for phase boundary between single and two phase regions

• extension of boundary (two)
→ both should toward outside the triangle or inside the triangle

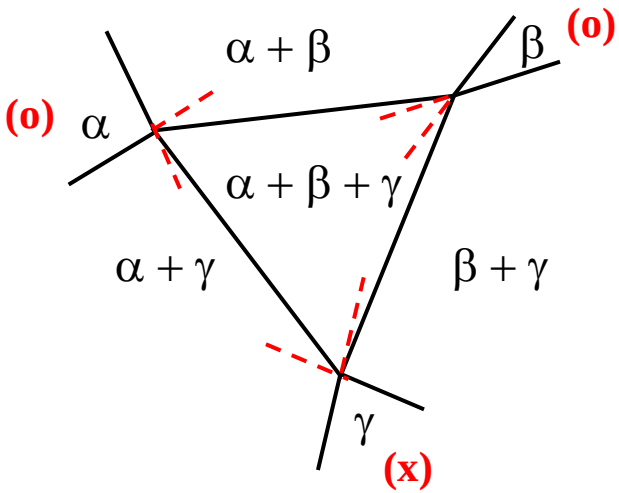

③ at vertex, single phase region will exist.

9.2. THREE-PHASE EQUILIBRIUM

① Coalescence of miscibility gap and two phase region

- How we can have 3 phase equil.?

critical point meet two phase region

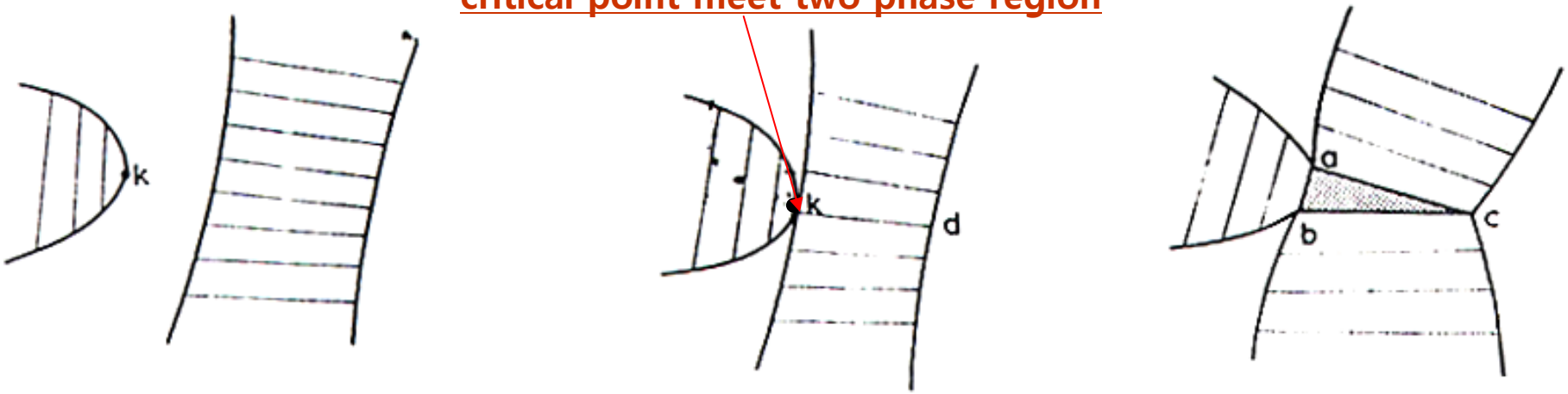

T_1 > T_2 > T_3

Fig. 136. Production of a ternary three-phase equilibrium by the coalescence of two two-phase regions

9.2. THREE-PHASE EQUILIBRIUM

① Coalescence of miscibility gap and two phase region

- When does not meet at critical point ?

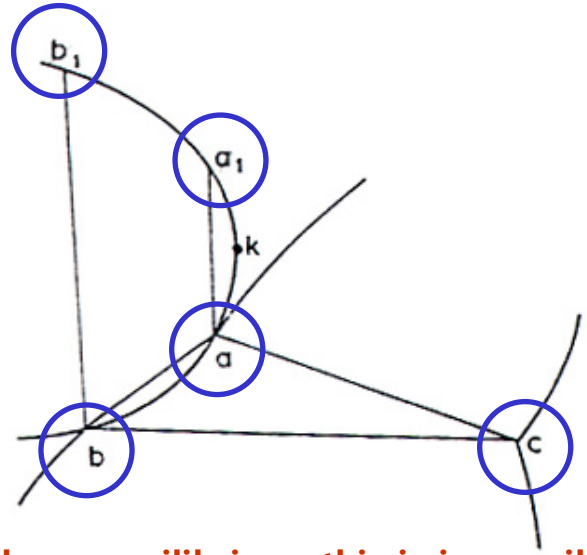

Five phase equilibrium: this is impossible.

- When two phase region does not overlapped onto same tie line in miscibility gap region?

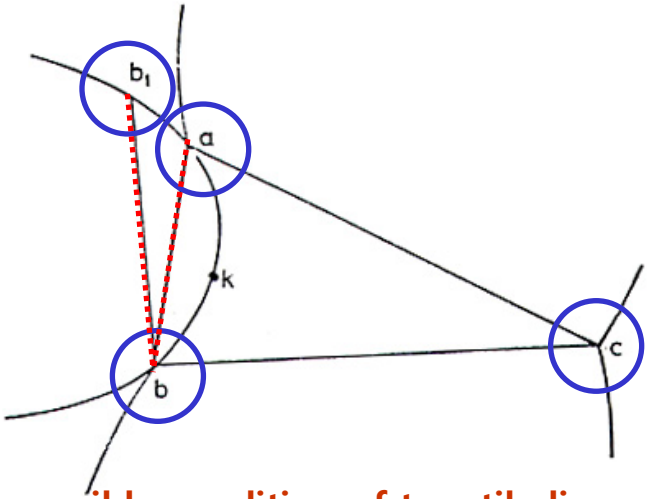

impossible condition of two tile lines: ab and bb1

Fig. 137. Conditions for the coalescence of two two-phase regions.
(a) Initial contact of the phase regions with point *k* outside curve *ab*;
(b) initial contact with point k on curve *ab*.

⇨ Phase a and b lie on the same tie line and with fall in temperature these phases approach point k, which is the first point of contact with the second two-phase region.

9.2. THREE-PHASE EQUILIBRIUM

② Coalescence of two two-phase region

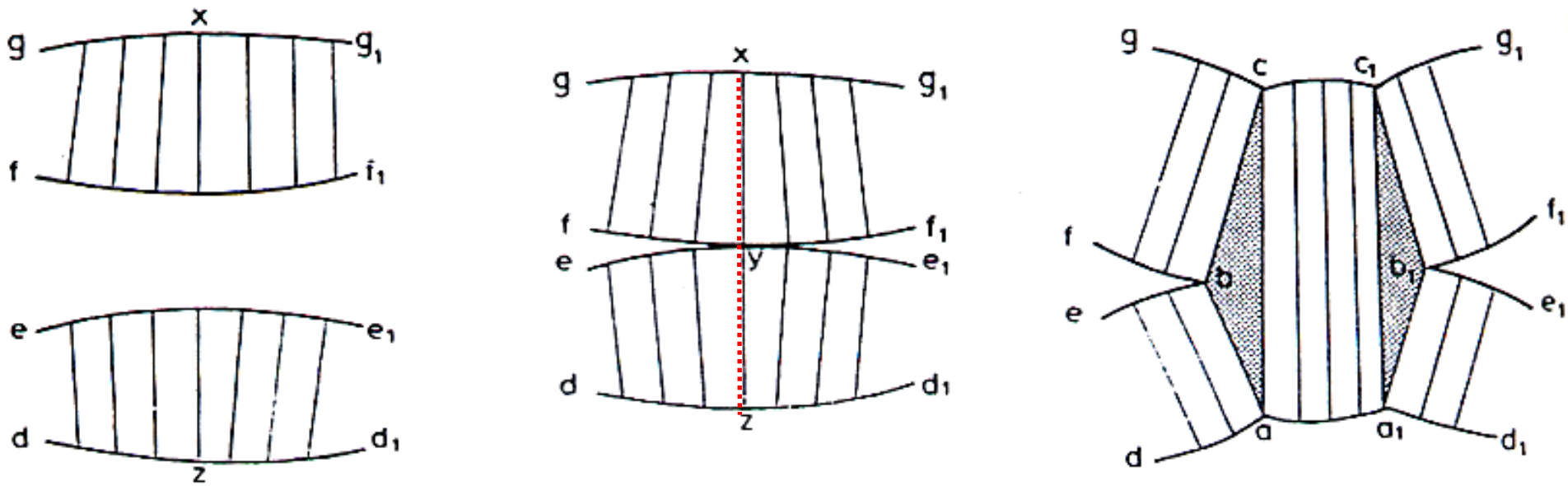

T_1 > T_2 > T_3

Two three-phase tie triangles *abc* and $a_1b_1c_1$

Fig. 138. Alternative method to Fig. 136 for the production of a ternary three-phase equilibrium by the coalescence of two two-phase regions

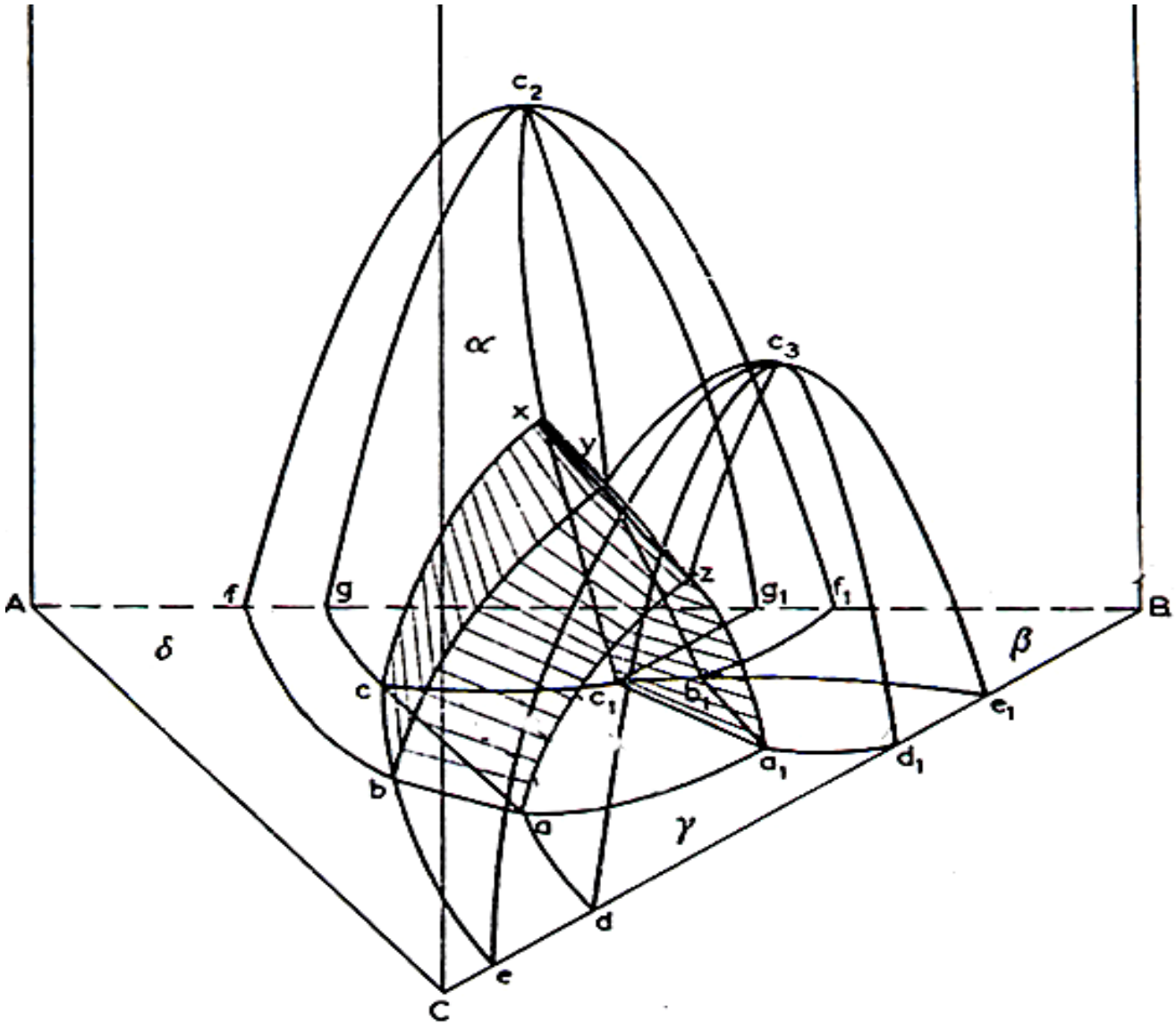

Fig. 139. Space model of a ternary system corresponding to Fig. 138

9.2. THREE-PHASE EQUILIBRIUM

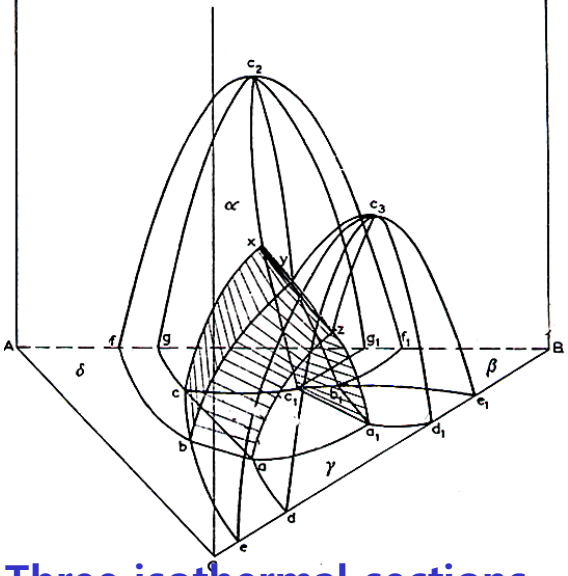

Degenerate tie triangle

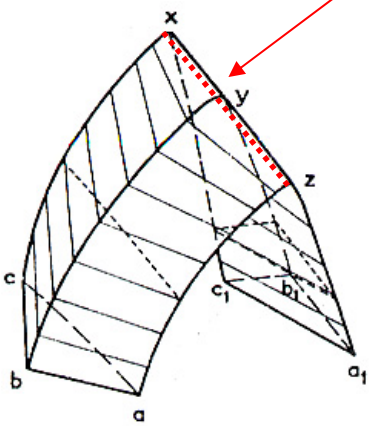

→ *n* component system, reaction between *n* phases occur then the temperature is max or min

→ ternary system, 3 phases are in a straight line as three points.

Three isothermal sections

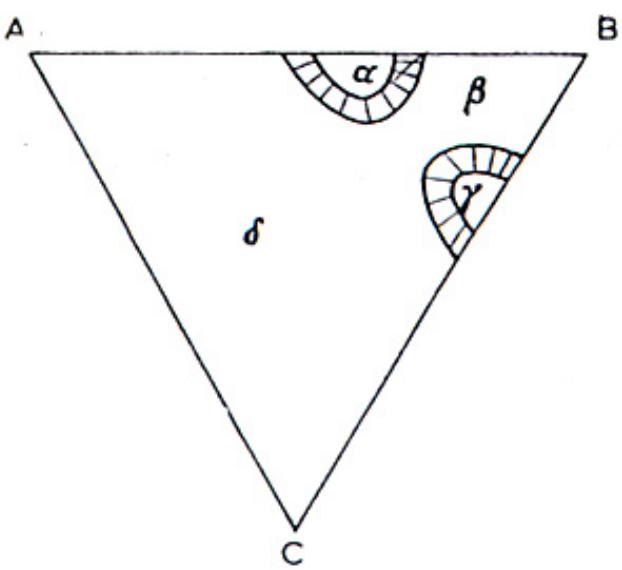

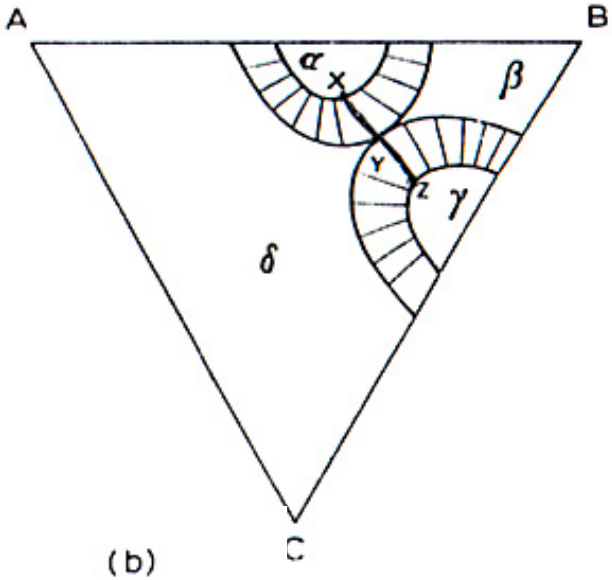

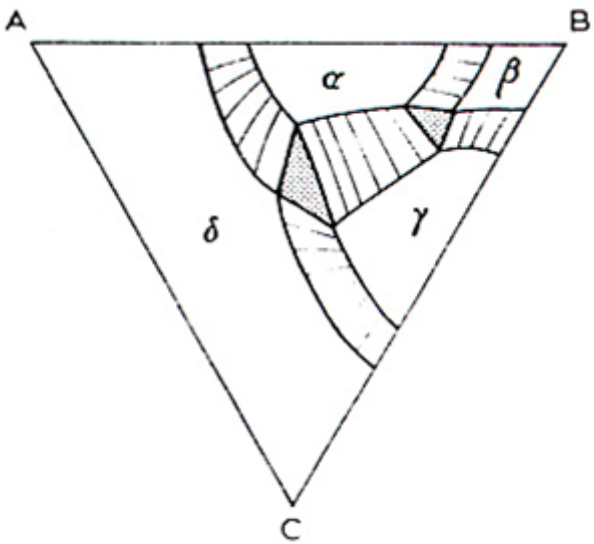

$T_1 > T_{xyz}$ (T_2)

$T_2 = T_{xyz}$

$T_3 < T_{xyz}$ (T_2)

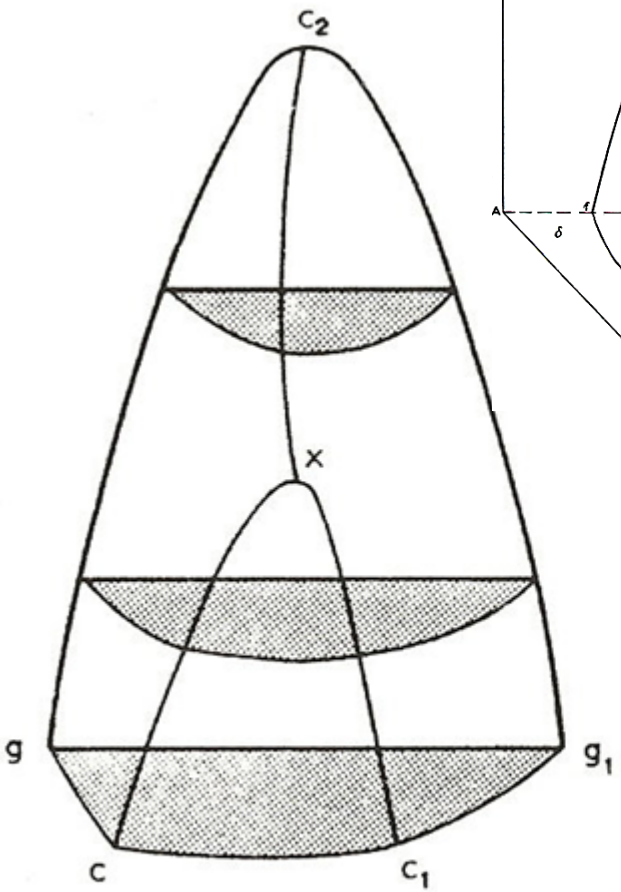

α phase region

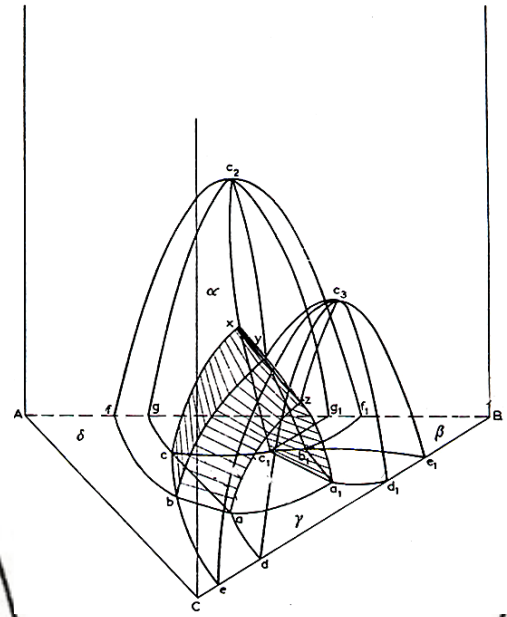

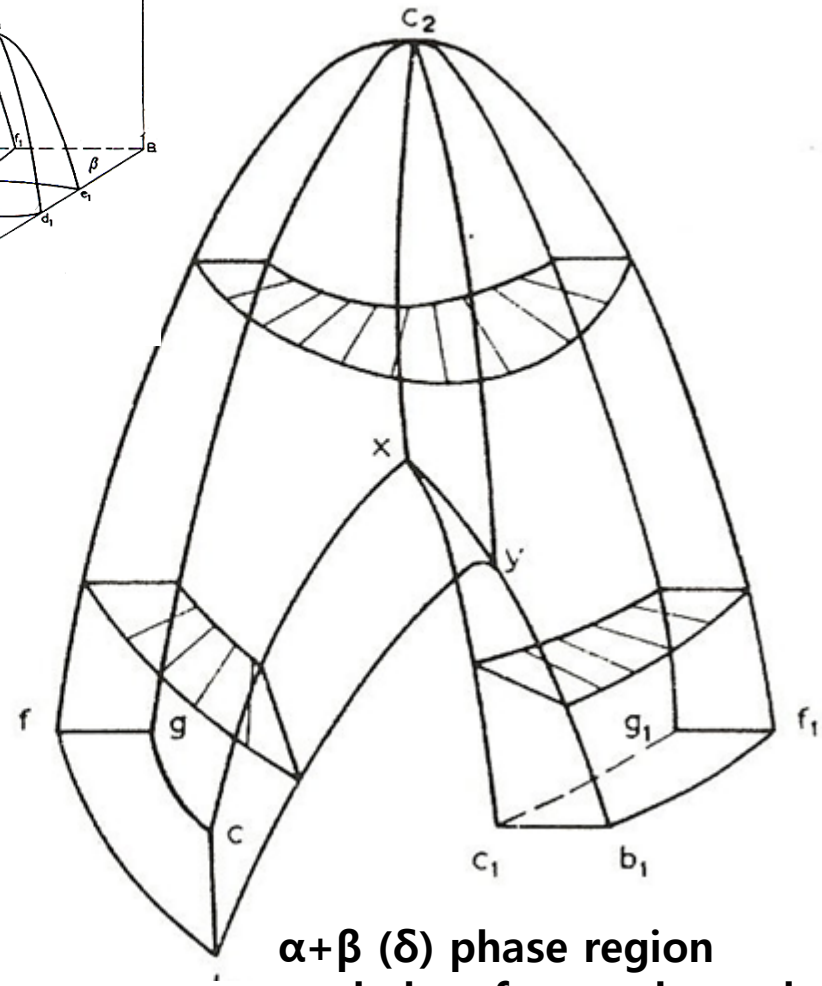

α+β (δ) phase region
- ruled surfaces xcby and xc_1b_1y

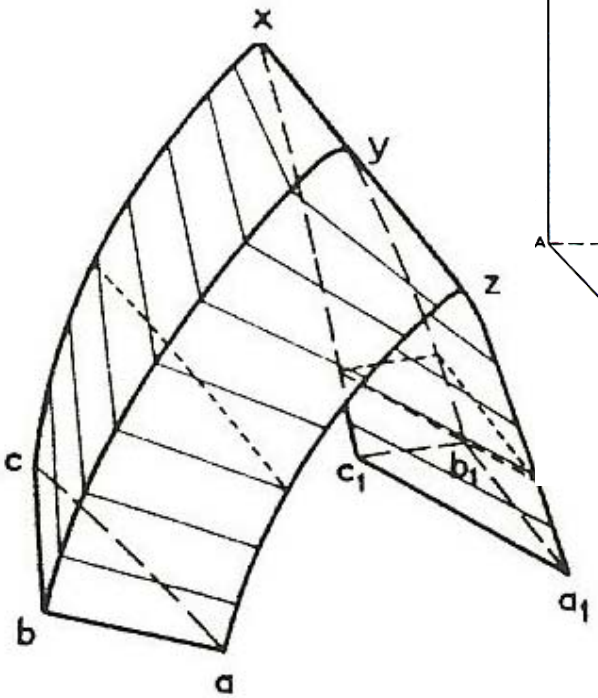

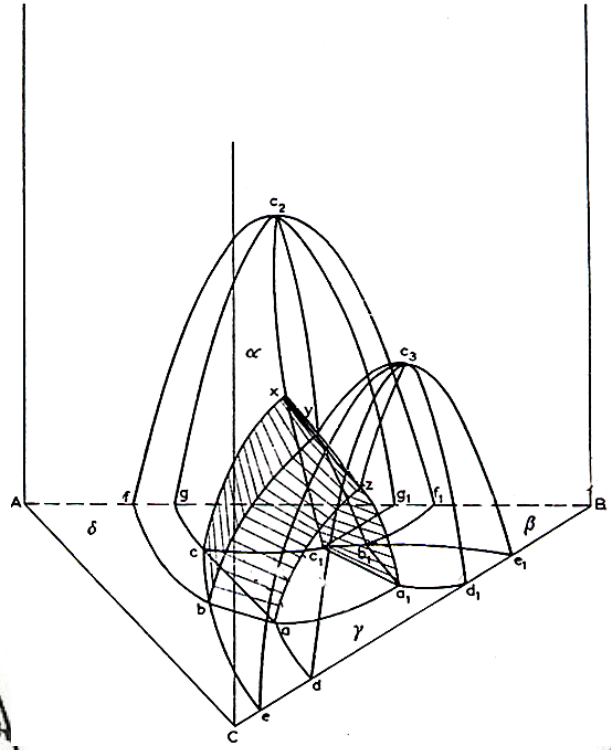

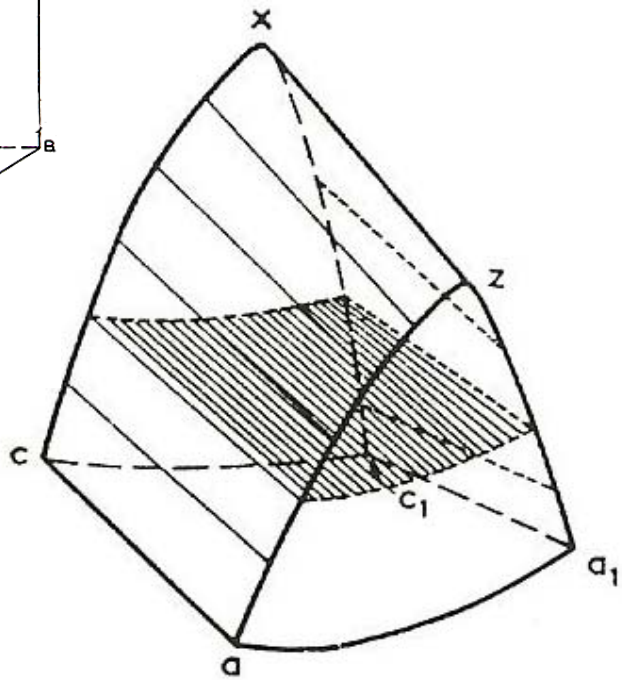

α+β(δ)+γ phase region
-ruled surfaces xcby, ybaz, xcaz, xc_1b_1y, yb_1a_1z and xc_1a_1z

α+ γ phase region
- ruled surfaces xcaz and xc_1a_1z