Lecture 24

Turbulent Boundary-Layer Flows (2)

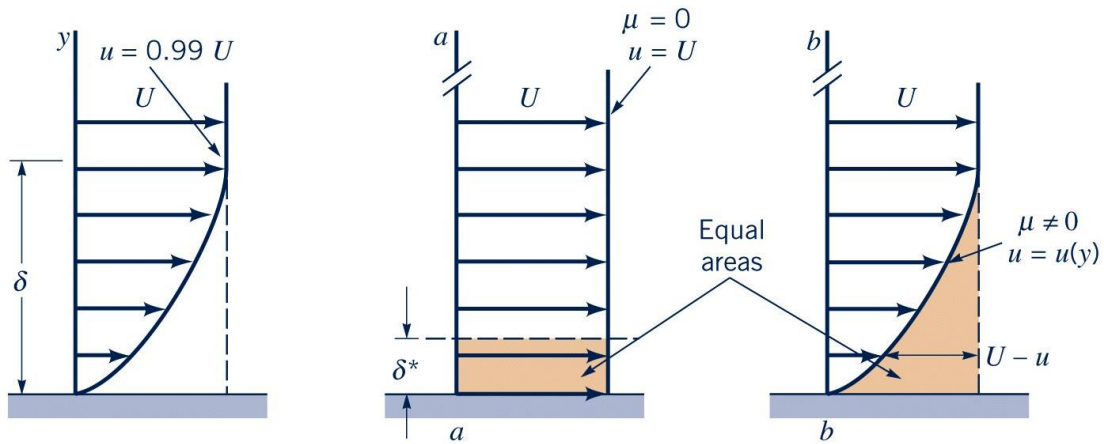

Lecture 24 Turbulent Boundary-Layer Flows (2)

Contents

Objectives

- Derive equations of velocity distribution and friction coefficient for both smooth and rough walls

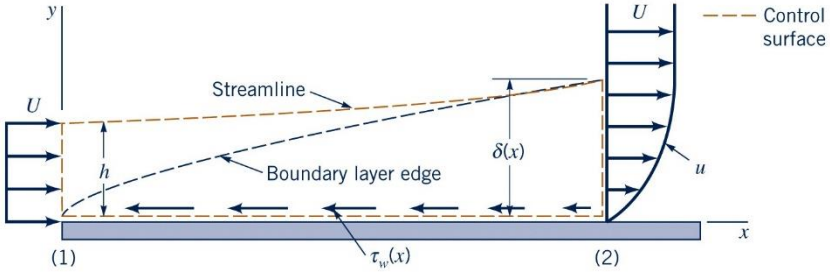

24.1 Velocity Profiles

- Relations describing the mean-flow characteristics in boundary layer

- It is useful to predict velocity magnitude and relation between velocity and wall shear or pressure gradient forces.

- It is desirable that these relations should not require knowledge of the turbulence details.

- **For laminar boundary layer**, it is possible to obtain a solution by integrating the equations of motion (Prandtl's 2D boundary layers equation, Eq. (17.7))

- However, **the turbulent boundary layer** is composed of zones of different types of flow, and effective viscosity varies from wall out through the layer.

- Thus, theoretical solution is not practical for the general non-uniform boundary layer → use semiempirical procedure

24.1 Velocity Profiles

24.1.1 Velocity profile regions

- No single equation will describe the velocity profile over its entire thickness δ.
- Close to the smooth boundary, a law of wall applies.
- For outer reaches of boundary layers for both smooth and rough walls, a velocity-defect law applies.

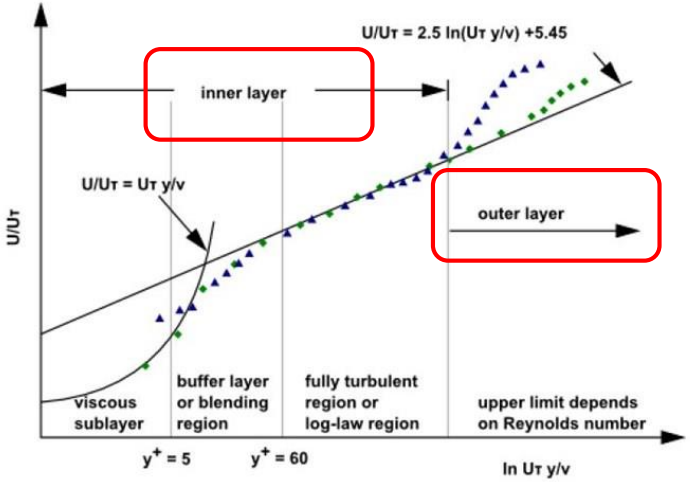

24.1 Velocity Profiles

- ***Regions of inner law (wall law)***

- Inner layer might be divided into three regions

① Viscous sublayer

② Buffer zone

③ Turbulent zone

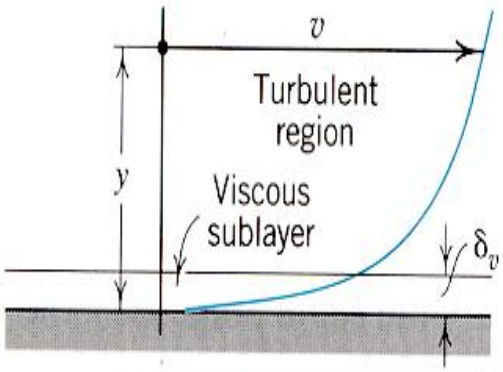

(a) Smooth boundary

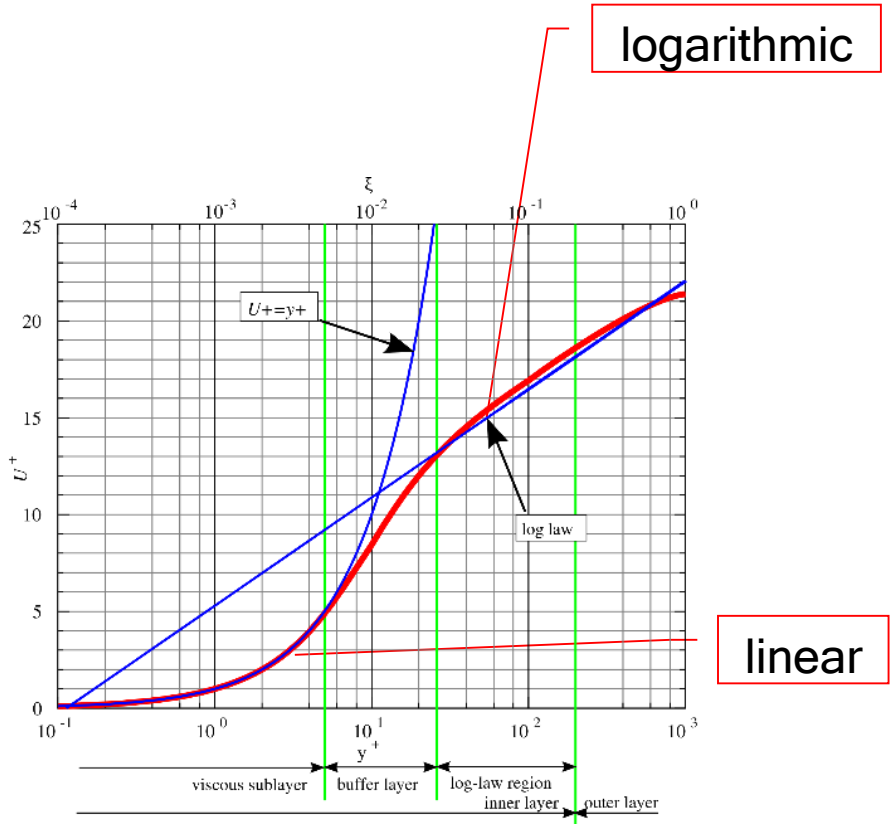

24.1 Velocity Profiles

1) Laminar sublayer: $0 < \frac{u_* y}{\nu} \leq 4$

- Velocity profile $\frac{d\bar{u}}{dy}$ is very nearly linear.

- Mean shear stress is controlled by the dynamic <u>molecular viscosity</u>.

- Reynolds stress is negligible, and mean flow is laminar.

- Energy of velocity fluctuation is nearly zero.

2) Buffer zone: $4 < \frac{u_* y}{\nu} < 30 \sim 70$

- Viscous and Reynolds stress are of the same order.

- Both laminar flow and turbulent flow exist.

- Sharp peak in the turbulent energy occurs.

24.1 Velocity Profiles

3) Turbulent zone - <u>inner region</u>: $\frac{u_* y}{\nu} > 30 \sim 70\,, and\ \frac{y}{\delta} < 0.15$

- Flow is fully turbulent.
- Intensity of turbulence decreases from its peak value.
- Velocity profile is logarithmic.

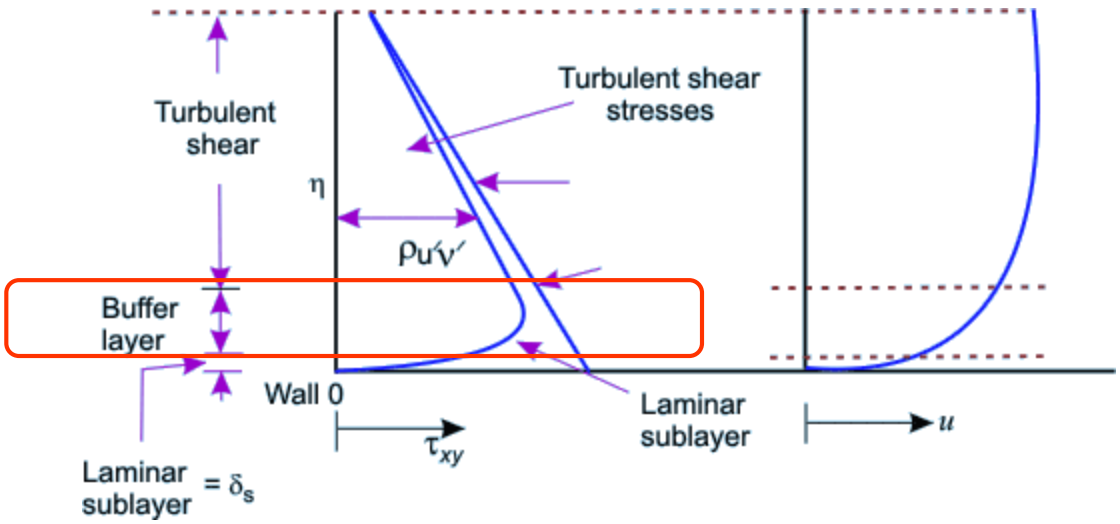

24.1 Velocity Profiles

- ***Regions of velocity-defect law***

- Outer layer might be divided into two regions.

① Turbulent zone-<u>outer region</u>: $0.15\delta < y < 0.4\delta$

② Intermittent zone: $0.4\delta < y < 1.2\delta$

- In the intermittent zone, flow is intermittently turbulent and non-turbulent.

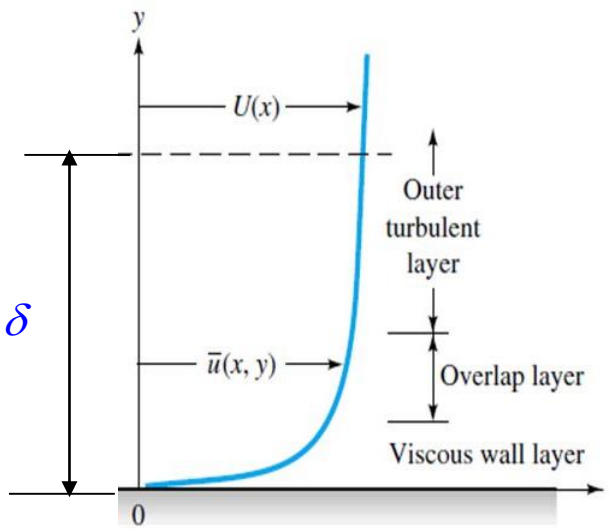

24.1 Velocity Profiles

- All zones merge smoothly into a continuous mean velocity profile.
- On rough wall, laminar sublayer is destroyed by the roughness elements.

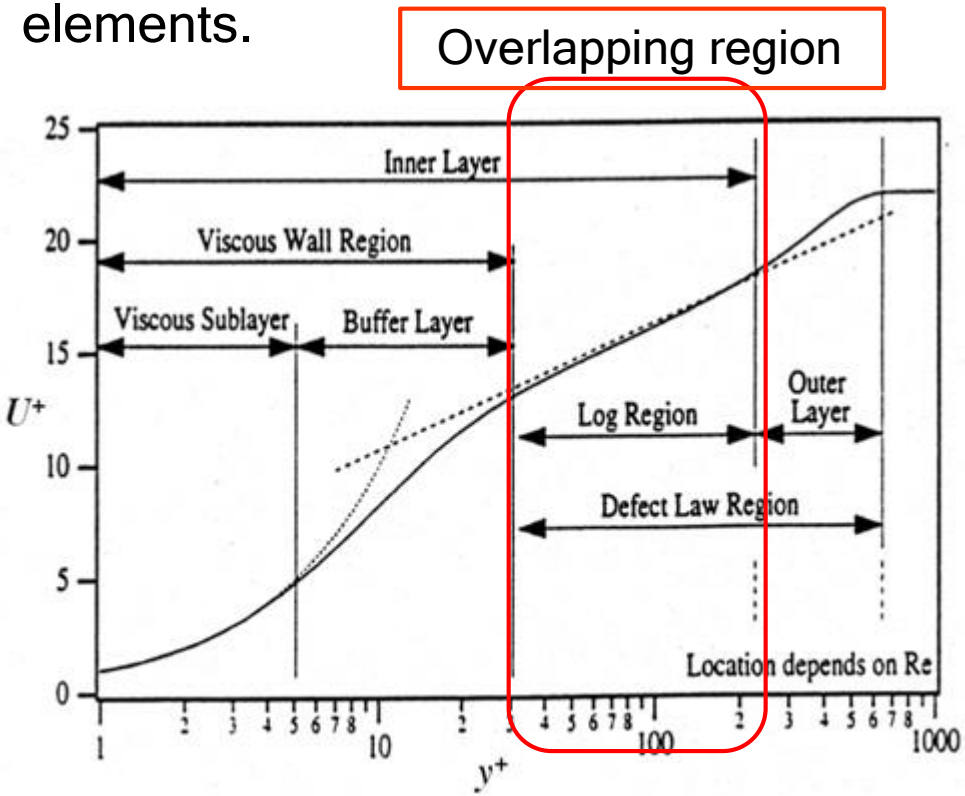

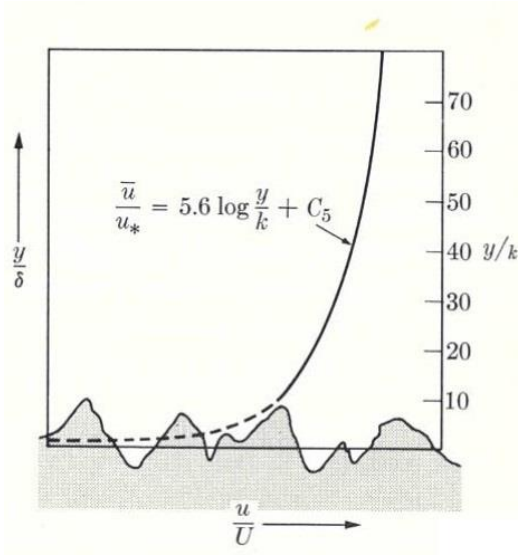

24.1 Velocity Profiles

24.1.2 Law of wall (Inner law)

- Close to smooth boundaries, molecular viscosity is dominant.
- Law of wall assumes that the relation between wall shear stress and velocity at distance y from the wall depends only on fluid density and viscosity.
- Dimensional analysis yields

$$f(\bar{u}, u_*, y, \rho, \mu) = 0$$

$$\frac{\bar{u}}{u_*} = f\left(\frac{u_* y}{\nu}\right) \qquad (24.1)$$

24.1 Velocity Profiles

- A unique law of wall, Eq. (24.1), shows $\frac{\bar{u}}{u_*}$ as a single line up to $\frac{u_* y}{\nu} = 2{,}000$
- At higher values of $\frac{u_* y}{\nu}$, a single velocity law no longer holds because <u>viscosity is no longer a major factor</u>.

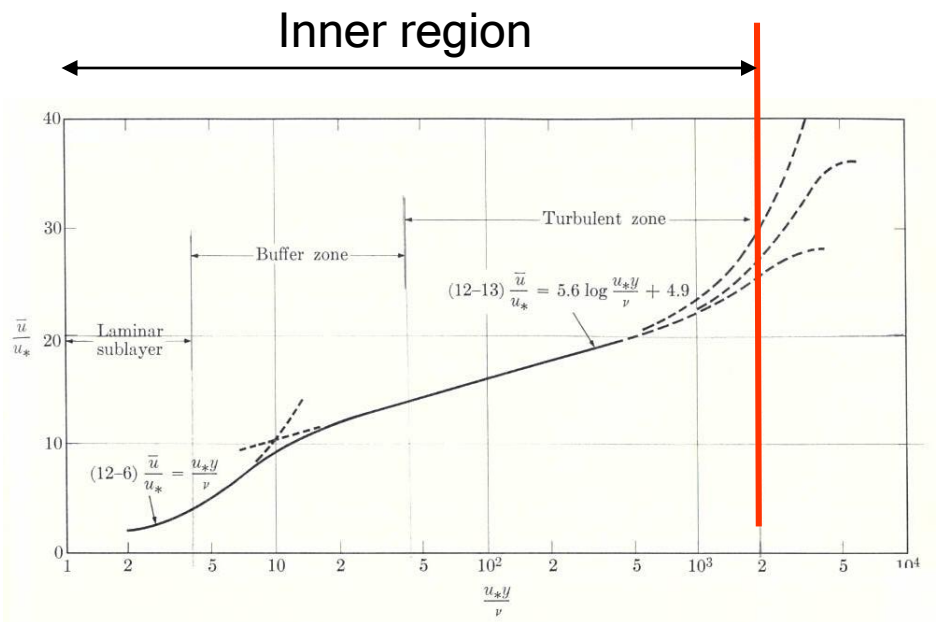

24.1 Velocity Profiles

1) Laminar sublayer

- The mean velocity is

$$\bar{u} \equiv u$$

- The shear stress may be assumed constant and equal to τ_0

$$\tau \approx \tau_0 = \mu \left. \frac{\partial u}{\partial y} \right|_{y=0} \equiv \mu \frac{u}{y} \qquad (24.2)$$

- Then Eq. 24.2 becomes

$$\frac{u}{u_*} = \frac{u_* y}{\nu} \qquad (24.3)$$

24.1 Velocity Profiles

- Thickness of laminar sublayer

- Define thickness of laminar sublayer (δ') as the value of y which makes

$$\frac{u_* y}{\nu} = \frac{u_* \delta'}{\nu} = 4$$

$$\delta' = \frac{4\nu}{u_*} = \frac{4\nu}{\sqrt{\frac{\tau_0}{\rho}}} = \frac{4\nu}{\left(\frac{c_f \rho U^2 / 2}{\rho}\right)^{\frac{1}{2}}} = \frac{4\nu}{U\sqrt{c_f / 2}} \qquad (24.4)$$

where $\tau_0 = c_f \rho \frac{u^2}{2}$; $c_f = local\ \ shear\ \ stress\ \ coeff.$

- c_f decreases slowly with increasing Reynolds number, $\mathrm{Re}_x = \frac{Ux}{\nu}$

Thus, δ' increases with distance along the surface.

Re] For the laminar sublayer in pipe flows

$$\delta' = 11.6\frac{\nu}{u_*}$$

24.1 Velocity Profiles

2) Turbulent region

- Start with equation of 2D turbulent boundary layer, Eq. (21.15a)

$$\rho\left(\frac{\partial \bar{u}}{\partial t}+\bar{u}\frac{\partial \bar{u}}{\partial x}+\bar{v}\frac{\partial \bar{u}}{\partial y}\right)=-\frac{\partial \bar{p}}{\partial x}-\rho\frac{\partial \overline{u'^2}}{\partial x}+\boxed{\mu\frac{\partial^2 \bar{u}}{\partial y^2}-\rho\frac{\partial \overline{u'v'}}{\partial y}}$$

- In the turbulent zone of near wall region, the mean shear stress remains nearly equal to the wall shear; $\tau \approx \tau_0$

$$\rho\left(\frac{\partial \bar{u}}{\partial t}+\bar{u}\frac{\partial \bar{u}}{\partial x}+\bar{v}\frac{\partial \bar{u}}{\partial y}\right)+\frac{\partial \bar{p}}{\partial x}+\rho\frac{\partial \overline{u'^2}}{\partial x}=\frac{\partial}{\partial y}\left(\mu\frac{\partial \bar{u}}{\partial y}-\rho\overline{u'v'}\right)=\frac{\partial \tau}{\partial y}\approx\frac{\partial \tau_0}{\partial y}=0$$

- Hence a solution is obtained if we have a relation for τ_0

- We can use Prandtl's mixing length theory for near wall, $l=\kappa y$

$$\tau_0 \approx \tau = \rho l^2\left|\frac{d\bar{u}}{dy}\right|\frac{d\bar{u}}{dy}=\rho\kappa^2 y^2\left(\frac{d\bar{u}}{dy}\right)^2 \qquad (1)$$

24.1 Velocity Profiles

Integrate (1)

$$\bar{u} = \frac{u_*}{\kappa}\ln y + C_1 \qquad u_* = \sqrt{\frac{\tau_0}{\rho}}$$

$$\boxed{\frac{\bar{u}}{u_*} = \frac{1}{\kappa}\ln y + C_1} \qquad (24.5)$$

Substitute BC [$\bar{u} = 0$ at $y = y'$] into (24.5)

$$0 = \frac{1}{\kappa}\ln y' + C_1 \qquad (24.6)$$

$$\therefore C_1 = -\frac{1}{\kappa}\ln y'$$

Assume $y' \propto \frac{\nu(m^2/s)}{u_*(m/s)} \rightarrow y' = C\frac{\nu}{u_*}$

Then (24.6) becomes

$$C_1 = -\frac{1}{\kappa}\ln y' = -\frac{1}{\kappa}\ln\left(C\frac{\nu}{u_*}\right) = C_2 - \frac{1}{\kappa}\ln\frac{\nu}{u_*} \qquad (24.7)$$

24.1 Velocity Profiles

Substitute (24.7) into (24.5)

$$\frac{\bar{u}}{u_*} = \frac{1}{\kappa}\ \ln y + C_2 - \frac{1}{\kappa}\ \ln\frac{\nu}{u_*} = \frac{1}{\kappa}\ \ln\left(\frac{u_* y}{\nu}\right) + C_2$$

Changing the logarithm to base 10 yields

$$\boxed{\frac{\bar{u}}{u_*} = \frac{2.3}{\kappa}\log_{10}\left(\frac{u_* y}{\nu}\right) + C_2} \qquad (24.8)$$

Empirical values of κ and C_2 <u>for inner region of the boundary layer</u>, $\frac{y}{\delta} < 0.15$

$$\kappa = 0.41;\quad C_2 = 4.9$$

$$\boxed{\frac{\bar{u}}{u_*} = 5.6\ \log\left(\frac{u_* y}{\nu}\right) + 4.9,\ \ 30 \sim 70 < \frac{u_* y}{\nu},\ \ and\ \frac{y}{\delta} < 0.15} \qquad (24.9)$$

→ Prandtl's velocity distribution law; inner law; wall law

24.1 Velocity Profiles

[Re] Prandtl's turbulent boundary layer equation

x-eq.
$$\rho\left(\frac{\partial \bar{u}}{\partial t}+\bar{u}\frac{\partial \bar{u}}{\partial x}+\bar{v}\frac{\partial \bar{u}}{\partial y}\right)=-\frac{\partial \bar{p}}{\partial x}-\rho\frac{\partial \overline{u'^2}}{\partial x}+\mu\frac{\partial^2 \bar{u}}{\partial y^2}-\rho\frac{\partial \overline{u'v'}}{\partial y} \qquad (24.10a)$$

y-eq.
$$0=-\frac{\partial}{\partial y}(\bar{p}+\rho\overline{v'^2}) \qquad (24.10b)$$

Continuity eq.:
$$\frac{\partial \bar{u}}{\partial x}+\frac{\partial \bar{v}}{\partial y}=0 \qquad (24.10c)$$

Solution to these equations: $\bar{u}(x,y,t),\ \bar{v}(x,y,t),\ \bar{p}(x,y,t)$

$$\frac{\bar{u}}{u_*}=5.6\ \log\left(\frac{u_* y}{\nu}\right)+4.9 \quad \rightarrow \quad \bar{u}\ =\ \bar{u}(y)$$

24.1 Velocity Profiles

24.1.3 Velocity-defect law

- In the outer reaches of the turbulent boundary layer for both smooth and rough walls, Reynolds stresses dominate the viscous stresses to produce the velocity profile.
- It was observed that the velocity defect (reduction) at y-values was dependent on the magnitude of the wall shear stress

$$\frac{U-\bar{u}}{u_*} = g\left(\frac{y}{\delta}\right) \qquad (24.11)$$

- A logarithmic relation for the function g can be obtained by assuming that Eq. (24.8) will give $\bar{u} = U \; at \; y = \delta$.

$$\frac{U}{u_*} = \frac{2.3}{\kappa}\log\left(\frac{u_*\delta}{\nu}\right) + C_2' \qquad (24.12)$$

24.1 Velocity Profiles

Subtract (24.8) from (24.12)

$$\frac{U}{u_*} = \frac{2.3}{\kappa}\log\left(\frac{u_*\delta}{\nu}\right) + C_2'$$

$$-\quad \frac{\bar{u}}{u_*} = \frac{2.3}{\kappa}\log\left(\frac{u_* y}{\nu}\right) + C_2$$

$$\frac{U-\bar{u}}{u_*} = \frac{2.3}{\kappa}\left\{\log\left(\frac{u_*\delta}{\nu}\right) - \log\left(\frac{u_* y}{\nu}\right)\right\} + C_2' - C_2$$

$$= \frac{2.3}{\kappa}\log\left(\frac{u_*\delta}{\nu}\frac{\nu}{u_* y}\right) + C_3 = -\frac{2.3}{\kappa}\log\left(\frac{y}{\delta}\right) + C_3$$

$$\boxed{\frac{U-\bar{u}}{u_*} = -\frac{2.3}{\kappa}\log\left(\frac{y}{\delta}\right) + C_3} \qquad (24.13)$$

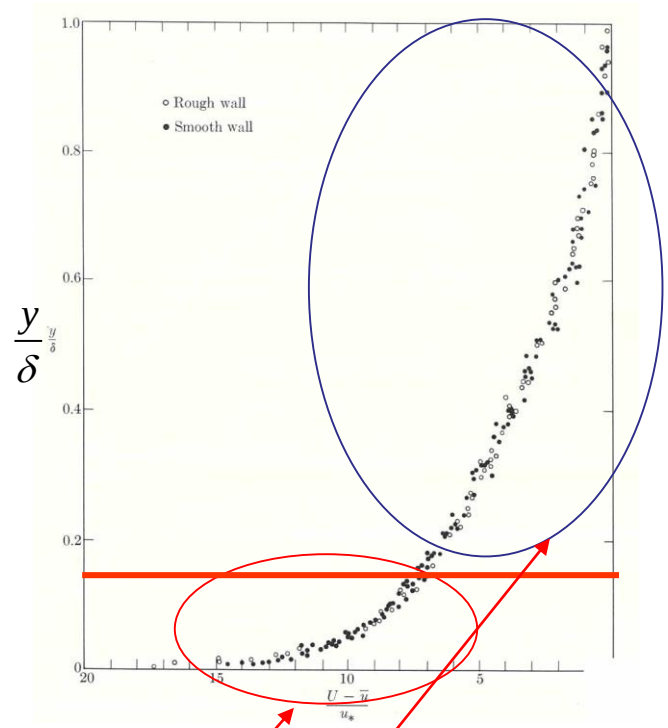

- A single log-equation does not fit the data over the entire boundary layer.
- Instead <u>one equation will fit an inner region overlapping with Eq. (24.8),</u> while <u>second equation will approximate the outer region</u>.

24.1 Velocity Profiles

i) Inner region; $\frac{y}{\delta} \le 0.15$

$\rightarrow \kappa = 0.41,\ C_3 = 2.5$

$$\boxed{\frac{U-\bar{u}}{u_*} = -5.6\log\left(\frac{y}{\delta}\right) + 2.5} \quad (24.14)$$

ii) Outer region; $\frac{y}{\delta} > 0.15$

$\rightarrow \kappa = 0.267,\ C_3 = 0$

$$\boxed{\frac{U-\bar{u}}{u_*} = -8.6\log\left(\frac{y}{\delta}\right)} \quad (24.15)$$

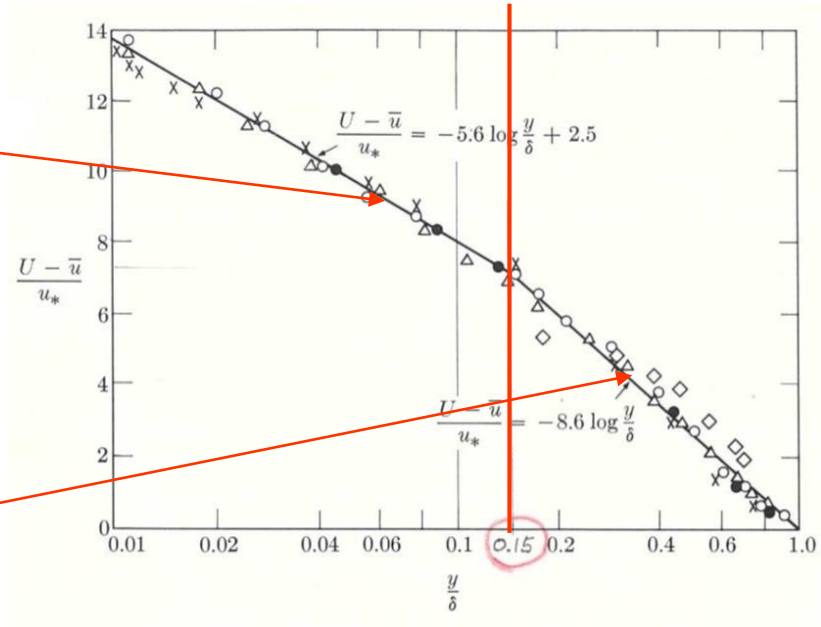

$\rightarrow$ Eqs. (24.14) & (24.15) apply to both smooth and rough surfaces.

$\rightarrow$ Eq. (24.14) = Eq. (24.9) $\frac{\bar{u}}{u_*} = 5.6\ \log\left(\frac{u_* y}{\nu}\right) + 4.9$

[Re] Eq. (24.12) - Eq. (24.14) = Eq. (24.9)

Velocity Profile equations

	Wall law	Velocity-defect law	
	Smooth wall	Smooth wall	Rough wall
Outer region $\frac{y}{\delta} > 0.15$	–	$\frac{U-\bar{u}}{u_*} = -8.6\log\left(\frac{y}{\delta}\right)$	
Inner region $30 \sim 70 < \frac{u_* y}{\nu}$ $\frac{y}{\delta} < 0.15$	$\frac{\bar{u}}{u_*} = 5.6\log\left(\frac{u_* y}{\nu}\right) + 4.9$	$\frac{U-\bar{u}}{u_*} = -5.6\log\left(\frac{y}{\delta}\right) + 2.5$	
Laminar sublayer	$\frac{u}{u_*} = \frac{u_* y}{\nu}$	–	

Overlapping region

24.2 Surface Resistance Formulas

24.2.1 Local shear stress coefficient

- Local shear-stress coefficient on smooth walls

velocity profile ↔ shear-stress equations

$$u_* = \sqrt{\tau / \rho} = \sqrt{\frac{c_f}{2}} U \rightarrow \frac{U}{u_*} = \sqrt{\frac{2}{c_f}}$$

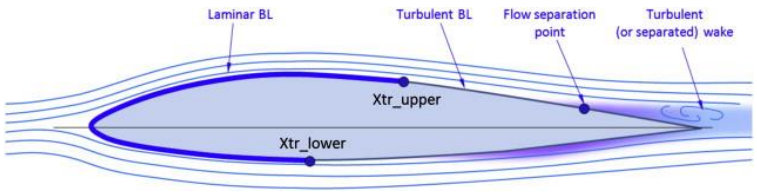

where c_f = local shear stress coefficient

[Re] Skin drag force $D_f = \tau_0 A = \frac{1}{2} A \rho c_f U^2$ $D = D_f + D_p$

$$\tau_0 = \frac{1}{2} \rho c_f U^2 \rightarrow \frac{\tau_0}{\rho} = \frac{c_f}{2} U^2$$

$$u_* = \sqrt{\frac{\tau_0}{\rho}} = \sqrt{\frac{c_f}{2}} U \qquad (24.16)$$

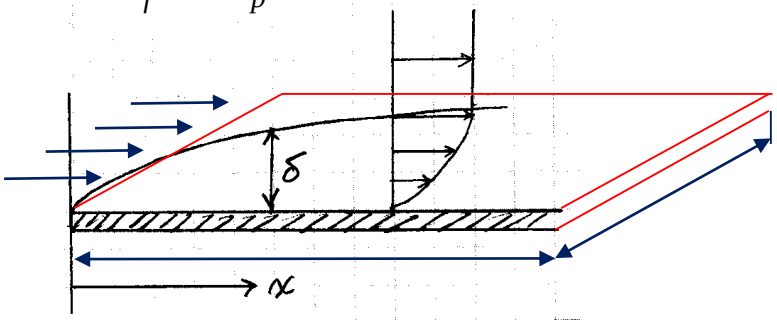

24.2 Surface Resistance Formulas

(i) Assume that logarithmic law will give the relation

Substituting $\bar{u} = U \; at \; y = \delta$ into Eq. (24.8) yields

$$\frac{U}{u_*} = \frac{2.3}{\kappa}\log\left(\frac{u_*\delta}{\nu}\right) + C_4 \qquad \text{(A)}$$

Substitute (24.16) into (A)

$$\boxed{\sqrt{\frac{2}{c_f}} = \frac{2.3}{\kappa}\log\left(\frac{U\delta}{\nu}\sqrt{\frac{c_f}{2}}\right) + C_4 = \frac{2.3}{\kappa}\log\left(\mathrm{Re}_\delta\sqrt{\frac{c_f}{2}}\right) + C_4} \qquad (24.17)$$

- c_f is a function of Reynolds number Re_δ for smooth walls.
- c_f is not given explicitly.

24.2 Surface Resistance Formulas

(ii) For <u>explicit expression</u>, use displacement thickness and momentum thickness θ instead of δ

Clauser: $$\frac{1}{\sqrt{c_f}} = 3.96 \log \mathrm{Re}_{\delta^*} + 3.04 \qquad (24.18)$$

Squire and Young: $$\frac{1}{\sqrt{c_f}} = 4.17 \log \mathrm{Re}_{\theta} + 2.54 \qquad (24.19)$$

where $\mathrm{Re}_{\delta^*} = \dfrac{U\delta^*}{\nu}$; $\mathrm{Re}_{\theta} = \dfrac{U\theta}{\nu}$

$$\mathrm{Re}_{\delta^*}\ ,\ \mathrm{Re}_{\theta} = f(\mathrm{Re}_x) \qquad (24.20)$$

24.2 Surface Resistance Formulas

iii) Karman's relation

- Assume turbulence boundary layer all the way from the leading edge (i.e., no preceding stretch of laminar boundary layer)

$$\frac{1}{\sqrt{c_f}} = 4.15\log(\mathrm{Re}_x c_f) + 1.7 \qquad (24.21)$$

- Karman's equation is useful for ships and aircraft wings where the laminar boundary layer is insignificant.

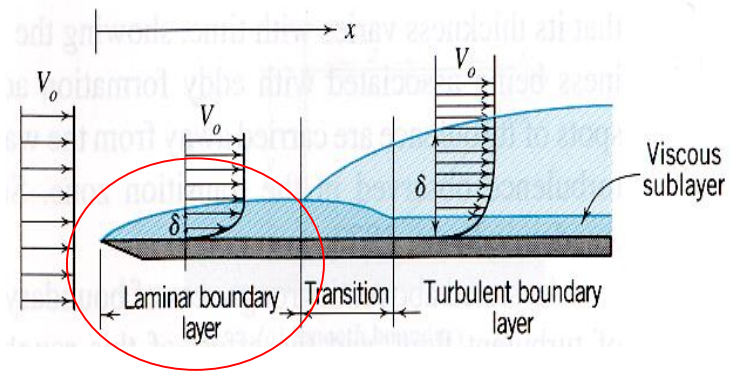

24.2 Surface Resistance Formulas

iv) Explicit equation by Schultz-Grunow (1940)

$$\boxed{c_f = \frac{0.370}{(\log \mathrm{Re}_x)^{2.58}}} \qquad (24.22)$$

Comparison of (24.21) and (24.22)

$$c_f \approx 0.001 \sim 0.01$$

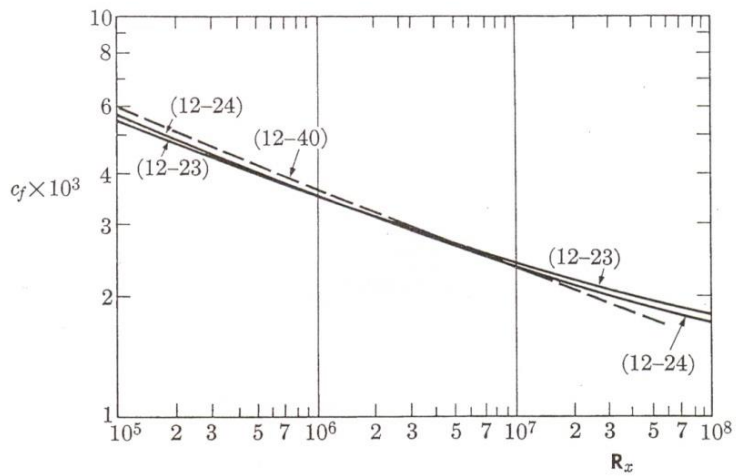

FIG. 12–9. Local coefficient of resistance.

24.2 Surface Resistance Formulas

24.2.2 Average shear stress coefficient

- Average shear-stress coefficient on smooth walls

Consider average shear-stress coefficient over a distance l along a flat plate of a width b

$$Total\ \ frictional\ drag\ (D_f) = \tau \times bl = \frac{1}{2} C_f \rho U^2 bl$$

$$C_f \equiv \frac{D}{bl\rho U^2 / 2}$$

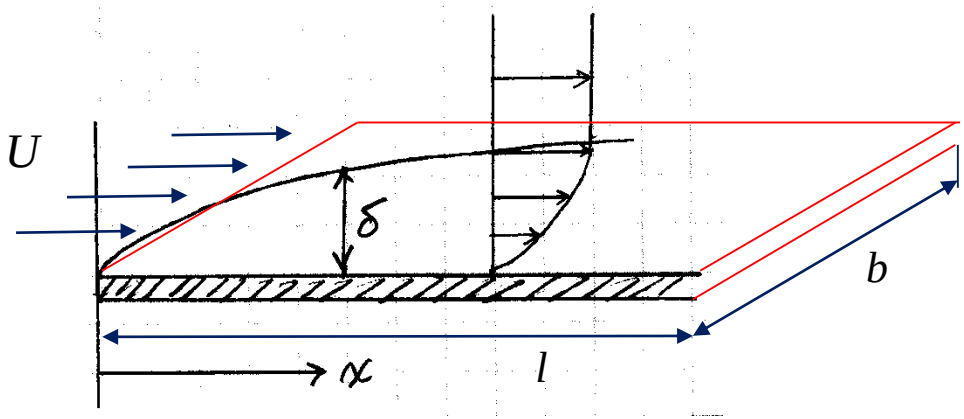

24.2 Surface Resistance Formulas

i) Schoenherr (1932)

$$\frac{1}{\sqrt{C_f}} = 4.13\log(\mathrm{Re}_l C_f) \qquad (24.23)$$

- Assume turbulence boundary layer all the way from the leading edge
- Similar to von Karman's equation

where $\mathrm{Re}_l = \dfrac{Ul}{\nu}$

ii) Schultz-Grunow

$$\boxed{C_f = \frac{0.427}{(\log \mathrm{Re}_l - 0.407)^{2.64}}} \quad , \quad 10^6 < \mathrm{Re}_l < 10^9 \qquad (24.24)$$

24.2 Surface Resistance Formulas

Comparison of (24.23) and (24.24)

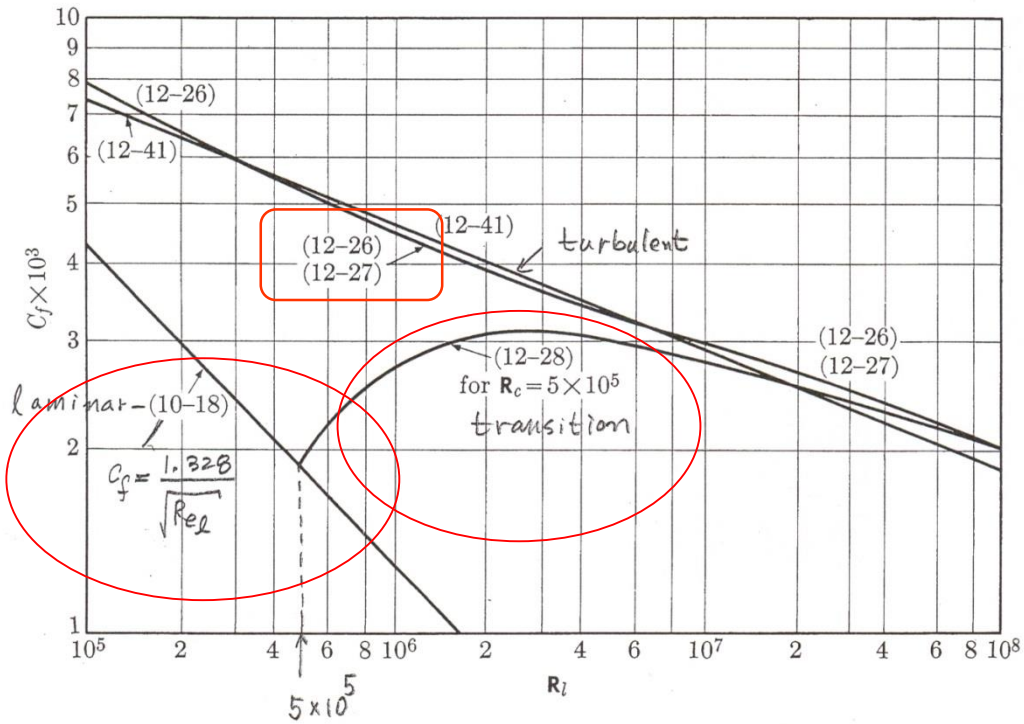

FIG. 12–10. Average coefficient of resistance for flat plates.

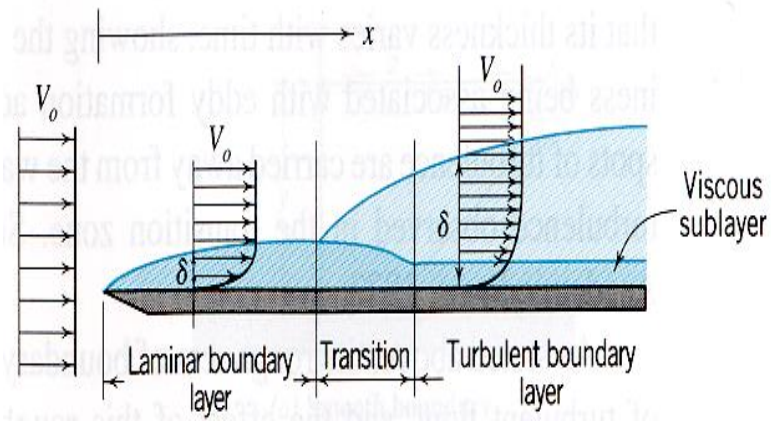

24.2 Surface Resistance Formulas

3) Transition formula

■ Boundary layer developing on a smooth flat plate

~ At upstream end (leading edge), laminar boundary layer develops because viscous effects dominate due to inhibiting effect of the smooth wall on the development of turbulence.

~ Thus, when there is a significant stretch of laminar boundary layer preceding the turbulent layer, total friction is the laminar portion up to x_{crit} plus the turbulent portion from x_{crit} to l.

~ Therefore, average shear-stress coefficient is lower than the prediction by Eqs. (24.23) or (24.24).

→ Use transition formula

$$C_f = \frac{0.427}{(\log \mathrm{Re}_l - 0.407)^{2.64}} - \frac{A}{\mathrm{Re}_l} \qquad (24.25)$$

24.2 Surface Resistance Formulas

where A/Re_l = correction term = $f(\mathrm{Re}_{crit})$, $\mathrm{Re}_{crit} = \dfrac{Ux_{crit}}{\nu}$

- Since A is a function of Re_{crit}, the curve in Fig. 10 is given for $\mathrm{Re}_{crit} = 5\times10^5$
- For flow along smooth walls

$$300{,}000 < \mathrm{Re}_{crit} < 600{,}000$$

Re_{crit}	3×10^5	4×10^5	5×10^5	6×10^5	10^6
A	1,060	1,400	1,740	2,080	3,340

- For laminar flow:

$$C_f = \frac{1.328}{\mathrm{Re}_l^{1/2}} \qquad (17.26)$$

24.2 Surface Resistance Formulas

SURFACE RESISTANCE FORMULAS FOR BOUNDARY LAYERS WITH $d\bar{p}/dx = 0$

	Smooth walls	Rough walls
LOCAL SHEAR		
Universal equations		
Clauser (12–20)	$1/\sqrt{c_f} = 3.96 \log \mathbf{R}_{\delta^*} + 3.04$	(12–46) $\frac{1}{\sqrt{c_f}} = 3.96 \log \frac{\delta}{k} + C_8$ $C_8 = f$ (size, shape, and distribution of roughness)
Squire and Young (12–21)	$1/\sqrt{c_f} = 4.17 \log \mathbf{R}_\theta + 2.54$	
von Kármán (12–23)	$1/\sqrt{c_f} = 4.15 \log (\mathbf{R}_x c_f) + 1.7$	
Schultz-Grunow (12–24)	$c_f = \frac{0.370}{(\log \mathbf{R}_x)^{2.58}}$	
Power law (12–40)	$c_f = \frac{0.0466}{\mathbf{R}_\delta^{1/4}} = \frac{0.059}{\mathbf{R}_x^{1/5}}$	
AVERAGE SHEAR		
Universal equations		
Schoenherr (12–26)	$1/\sqrt{C_f} = 4.13 \log (\mathbf{R}_l C_f)$	
Schultz-Grunow (12–27)	$C_f = \frac{0.427}{(\log \mathbf{R}_l - 0.407)^{2.64}}$	
Power law (12–41)	$C_f = \frac{0.074}{\mathbf{R}_l^{1/5}}$	
Transition formula		
Schultz-Grunow-Prandtl (12–28)	$C_f = \frac{0.427}{(\log \mathbf{R}_l - 0.407)^{2.64}} - \frac{A}{\mathbf{R}_l}$ $A = f(\mathbf{R}_{\text{crit}})$ as given in Table 12–2	

24.2 Surface Resistance Formulas

[Ex. 24.1] Turbulent boundary-layer velocity and thickness

An aircraft flies at 25,000 ft with a speed of 410 mph (600 ft/s).

Compute the following items for the boundary layer at a distance 10 ft from the leading edge of the wing of the craft.

24.2 Surface Resistance Formulas

[Re] Drag force

① Frictional drag = surface resistance = skin drag

② Pressure drag = form drag

~ depends largely on shape or form of the body

For airfoil, hydrofoil, and slim ships: surface drag > form drag

For bluff objects like spheres, bridge piers: surface drag < form drag

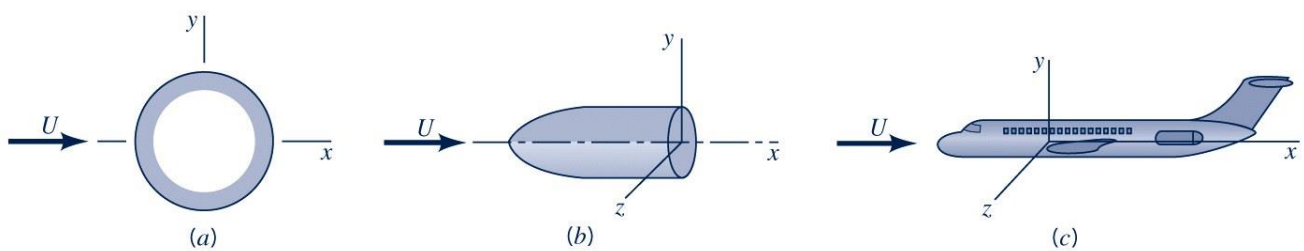

24.2 Surface Resistance Formulas

(a) Thickness δ' (laminar sublayer; $\delta' = \dfrac{4\nu}{u_*}$) at $x = 10ft$

Air at El. 25,000 ft: $\nu = 3\times10^{-4}\ ft^2/s$

$$\rho = 1.07\times10^{-3}\ slug/\ ft^3$$

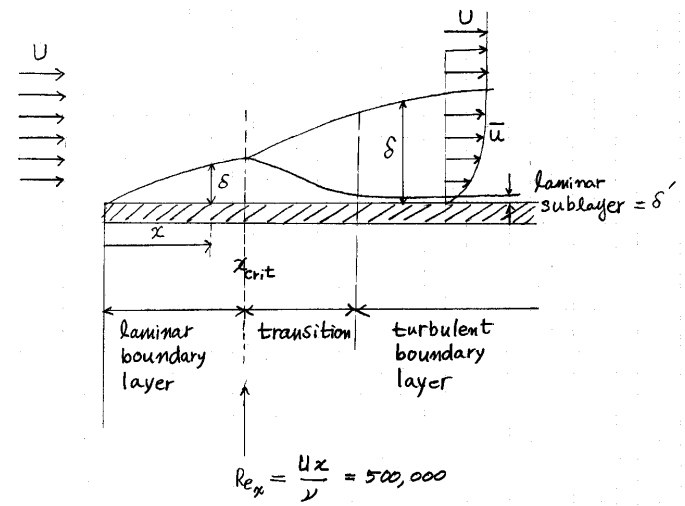

Find $\mathrm{Re}_{crit} = 5\times10^5 = \dfrac{600(x)}{3\times10^{-4}}$

$\therefore\ x_{crit} = 0.25\,ft \sim$ negligible comparaed to $l = 10\,ft$

Therefore, assume that turbulent boundary layer develops all the way from the leading edge.

$$\mathrm{Re}_x = \frac{Ux}{\nu} = \frac{600(10)}{(3\times10^{-4})} = 2\times10^7$$

24.2 Surface Resistance Formulas

Use Schultz-Grunow eq., (24.22) to compute c_f

$$c_f = \frac{0.370}{(\log \mathrm{Re}_x)^{2.58}} = \frac{0.370}{\left\{\log\left(2\times10^7\right)\right\}^{2.58}} = \frac{0.370}{(7.30)^{2.58}} = \boxed{0.0022}$$

$$\tau_0 = \frac{\rho}{2} c_f U^2 = \frac{1}{2}(1.07\times10^{-3})(0.0022)(600)^2 = \boxed{0.422\, lb/\, ft^2}$$

$$u_* = \sqrt{\frac{\tau_0}{\rho}} = \sqrt{\frac{0.422}{1.07\times10^{-3}}} = \boxed{19.8\ ft/s}$$

$$\delta' = \frac{4\nu}{u_*} = \frac{4(3\times10^{-4})}{19.8} = 0.61\times10^{-4}\ ft = \boxed{7.3\times10^{-4}\ in}$$

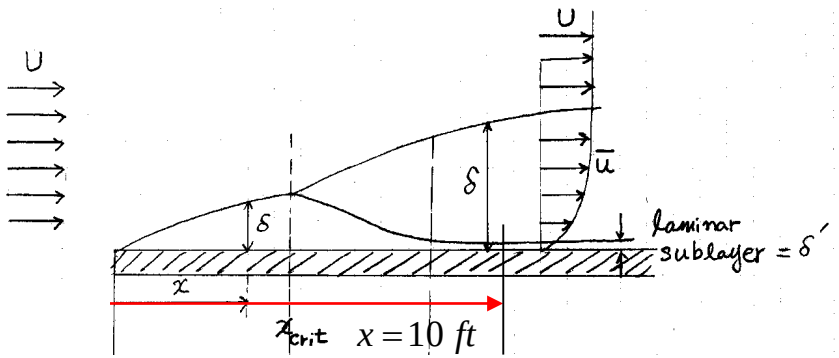

24.2 Surface Resistance Formulas

(b) Velocity $\bar{u}$ at $y = \delta'$

Eq. (24.1): $\dfrac{u}{u_*} = \dfrac{u_* y}{\nu}$

$$\therefore u = \frac{u_*^2 \delta'}{\nu} = \frac{(19.8)^2 (0.61 \times 10^{-4})}{(3 \times 10^{-4})} = 79.7 \ ft/s \rightarrow 13\% \ \text{of} \ U$$

$\uparrow$

$y = \delta'$

$[Cf]\, U = 600 \ ft/s$

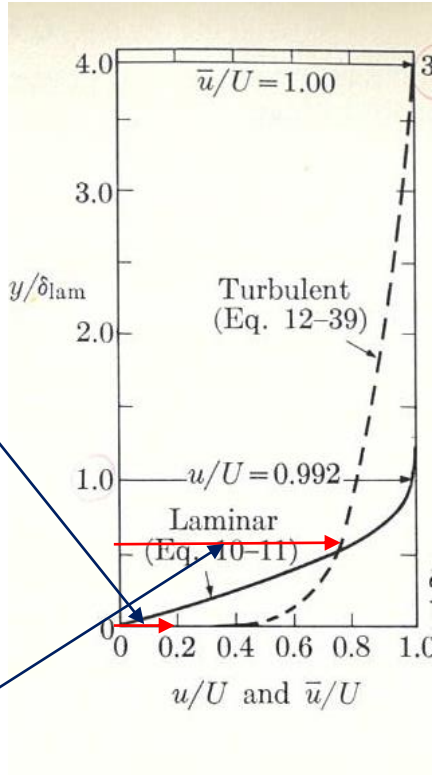

(c) Velocity $\bar{u}$ at $y/\delta = 0.15$

Use Eq. (24.14) - outer law

$$\frac{U - \bar{u}}{u_*} = -5.6 \log\left(\frac{y}{\delta}\right) + 2.5$$

$$\frac{600 - \bar{u}}{19.8} = -5.6 \underline{\log(0.15)} + 2.5$$

$$\bar{u} = 600 - 91.35 - 49.5 = 459.2 \ ft/s \rightarrow 76\% \ \text{of} \ U$$

24.2 Surface Resistance Formulas

[Cf] $\bar{u} = U + 5.6\, u_* \log\left(\frac{y}{\delta}\right) - 2.5 u_*$

(d) Distance y at $y/\delta = 0.15$ and thickness δ

Use Eq. (24.9) - inner law

$$\frac{\bar{u}}{u_*} = 5.6 \log\left(\frac{u_* y}{\nu}\right) + 4.9$$

$$At\,\frac{y}{\delta} = 0.15: \frac{459}{19.8} = 5.6 \log\left(\frac{19.8 y}{3\times10^{-4}}\right) + 4.9$$

$$\log\left(\frac{19.8 y}{3\times10^{-4}}\right) = 3.26; \quad \frac{19.8 y}{3\times10^{-4}} = 1839$$

$$y = 0.028' = 0.33in \approx 0.8cm$$

(B)

24.2 Surface Resistance Formulas

Substitute (B) into

$$\delta = \frac{y}{0.15} = 0.186' = 2.24in \approx 5.7cm$$

$$\text{At } x = 10': \ \frac{\delta}{\delta'} = \frac{0.186}{0.61 \times 10^{-4}} = 3049 \approx 3 \times 10^{3}$$

$$\frac{\delta'}{\delta} = 0.0003$$

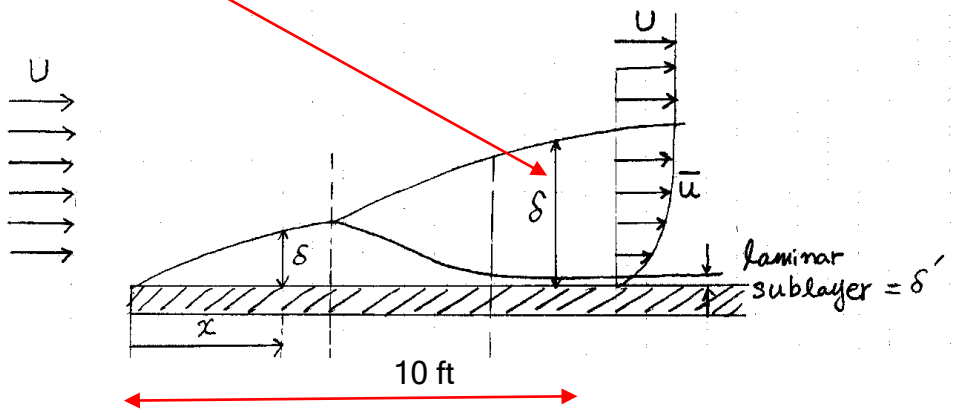

24.2 Surface Resistance Formulas

[Ex. 24.2] Surface resistance on a smooth boundary given as Ex. 24.1

(a) Find displacement thickness δ^*

$$\delta^* = \int_0^h \left(1 - \frac{u}{U}\right) dy \qquad (17.4)$$

$$\frac{\delta^*}{\delta} = \int_0^{h/\delta} \left(1 - \frac{\bar{u}}{U}\right) d\left(\frac{y}{\delta}\right), \qquad h/\delta \geq 1 \qquad (A)$$

Neglect laminar sublayer and approximate buffer zone with Eq. (24.14)

$$(i) \quad y/\delta < 0.15, \qquad \frac{U - \bar{u}}{u_*} = -5.6 \log\left(\frac{y}{\delta}\right) + 2.5 \quad \leftarrow (24.14)$$

Divide (24.14) by U

$$\ln x = 2.3 \log x$$

$$\therefore 1 - \frac{\bar{u}}{U} = -5.6 \frac{u_*}{U} \log \frac{y}{\delta} + 2.5 \frac{u_*}{U} = \left(-2.43 \ln \frac{y}{\delta} + 2.5\right) \frac{u_*}{U} \qquad (B)$$

24.2 Surface Resistance Formulas

$$(ii) \quad y/\delta > 0.15, \qquad \frac{U-\bar{u}}{u_*} = -8.6\log\left(\frac{y}{\delta}\right) \quad \leftarrow (24.15)$$

$$\therefore\ 1-\frac{\bar{u}}{U} = -8.6\frac{u_*}{U}\log\left(\frac{y}{\delta}\right) = -3.74\frac{u_*}{U}\ln\left(\frac{y}{\delta}\right) \qquad \text{(C)}$$

Substituting (B) and (C) into (A) yields

$$\therefore\ \frac{\delta^*}{\delta} = \int_{\delta'/\delta}^{0.15}\left(-2.43\ln\frac{y}{\delta}+2.5\right)\frac{u_*}{U}d\left(\frac{y}{\delta}\right)+\int_{0.15}^{1.0}\left(-3.74\ln\frac{y}{\delta}\right)\frac{u_*}{U}d\left(\frac{y}{\delta}\right)$$

$$= \frac{u_*}{U}\left[\left[-2.43\left\{\frac{y}{\delta}\ln\frac{y}{\delta}-\frac{y}{\delta}\right\}+2.5\frac{y}{\delta}\right]_{0.0003}^{0.15}+\left[-3.74\left\{\frac{y}{\delta}\ln\frac{y}{\delta}-\frac{y}{\delta}\right\}\right]_{0.15}^{1}\right]$$

$$\cong 3.74\frac{u_*}{U} = 3.74\frac{(19.8)}{600} = 0.1184$$

$$\boxed{\int \ln x\ dx = x\ln x - x}$$

24.2 Surface Resistance Formulas

$$\delta^* = 0.1184\delta = 0.1184\ (0.186) = 0.022\ ft$$

$$\frac{\delta^*}{\delta} = 0.1184 \quad \rightarrow \underline{11.8\%}$$

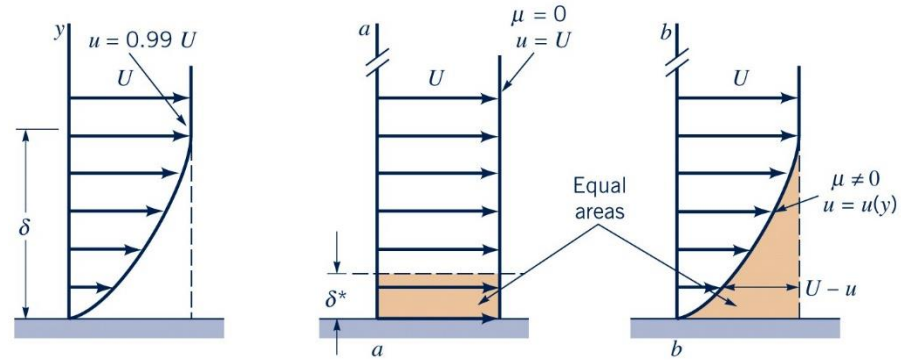

(b) Local surface-resistance coeff. c_f

Use Eq. (24.18) by Clauser

$$\frac{1}{\sqrt{c_f}} = 3.96\ \log\ \mathrm{Re}_{\delta^*} + 3.04 \quad \leftarrow \quad \mathrm{Re}_{\delta^*} = \frac{600 \times 0.022}{3 \times 10^{-4}} = 44{,}000$$

$$= 3.96\ \log(44{,}000) + 3.04$$

$$\therefore\ c_f = 2.18 \times 10^{-3} = \underline{0.00218}$$

[Cf] c_f = 0.0022 by Schultz-Grunow Eq.