Chapter 14 Output Stages and Power Amplifiers

- 14.1 General Considerations
- 14.2 Emitter Follower as Power Amplifier
- 14.3 Push-Pull Stage
- 14.4 Improved Push-Pull Stage
- 14.5 Large-Signal Considerations
- 14.6 Short Circuit Protection
- 14.7 Heat Dissipation
- 14.8 Efficiency
- 14.9 Power Amplifier Classes

Why Power Amplifiers?

- **Drive a load with high power.**
- **Cellular phones need 1W of power at the antenna.**
- **Audio systems deliver tens to hundreds of watts of power.**
- **Ordinary Voltage/Current amplifiers are not suitable for such applications**

Chapter Outline

Basic Stages

- Emitter Follower
- Push-Pull Stage and Improved Variants

Large-Signal Considerations

- Omission of PNP Transistor
- High-Fidelity Design

Heat Dissipation

- Power Ratings
- Thermal Runaway

Efficiency and PA Classes

- Efficiency of PAs
- Classes of PAs

Power Amplifier Characteristics

- Experiences low load resistance.
- Delivers large current levels.
- Requires large voltage swings.
- Draws a large amount of power from supply.
- Dissipates a large amount of power, therefore gets “hot”.

Power Amplifier Performance Metrics

- **Distortion - Linearity**
- **Power Efficiency**
- **Voltage Rating – Transistor Breakdown voltage**

Emitter Follower Large-Signal Behavior I

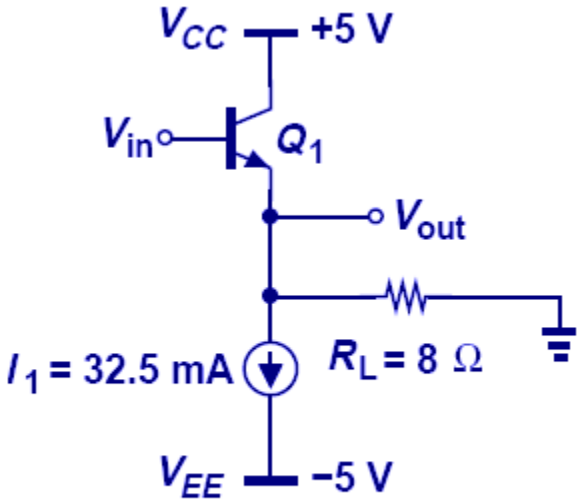

(a)

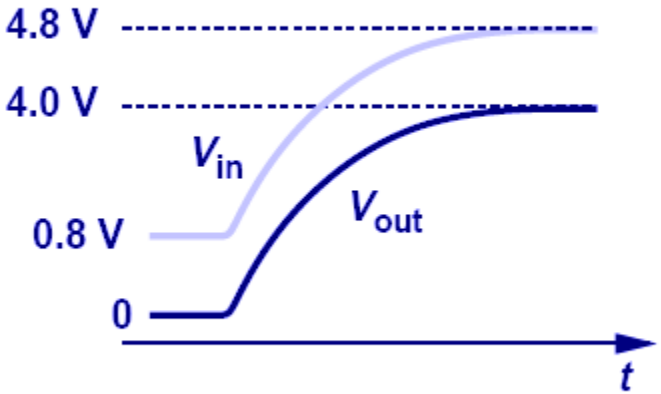

(b)

$$A_v = R_L / (R_L + 1/g_m)$$

For $R_L = 8\ \Omega$,

$1/g_m = 0.8\ \Omega$, thus, $I_C = 32.5$ mA

- **As V_{in} increases V_{out} also follows and Q_1 provides more current.**
- **For V_{in}=4.8V, V_{out}=4.0V, I_L=500mA, I_{E1}=532.5mA**

Emitter Follower Large-Signal Behavior II

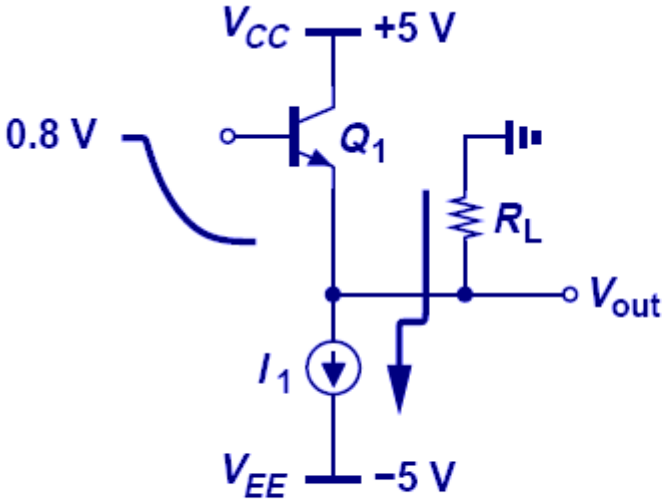

(c)

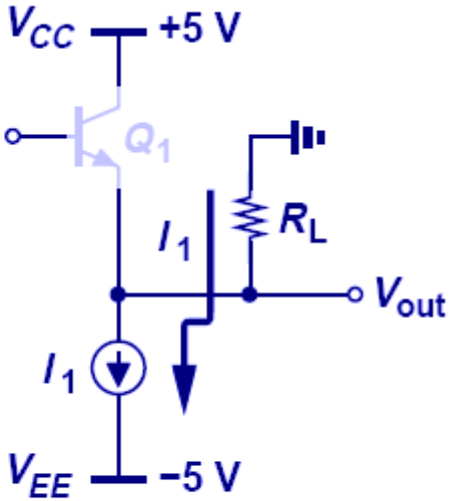

(d)

- **However, as V_{in} decreases, V_{out} also decreases, shutting off Q_1 and resulting in a constant V_{out}.**

- **For V_{in}=0.8V, V_{out}=0V, I_L=0mA, I_{E1}=32.5mA**
- **For V_{in}=0.7V, V_{out}=-0.1V, I_L=12.5mA, I_{E1}=20mA**
- **When all current (32.5mA) flows to the load, V_{out}=-0.26V**

Example 14.1: Emitter Follower

- V_{in}=0.5V, V_{out}=?

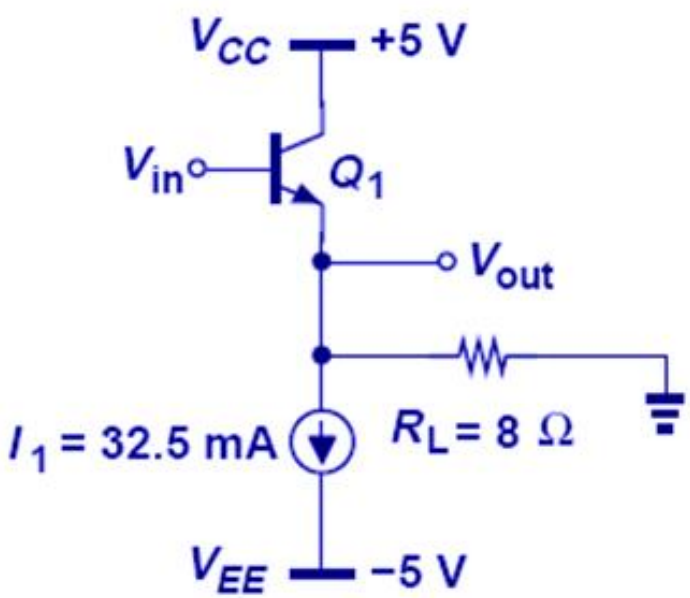

$$V_{in} - V_{BE1} = V_{out} \ , \quad \frac{V_{out}}{R_L} + I_1 = I_{C1}$$

$$V_{BE1} = V_T \ln(I_{C1} / I_S)$$

$$V_{in} - V_T \ln\left[\left(\frac{V_{out}}{R_L} + I_1\right)\frac{1}{I_S}\right] = V_{out}$$

For $V_{in} = 0.5\ V$

$\Rightarrow V_{out} \approx -211$ mV by a few iterations

Example 14.1: Emitter Follower

- **For what V_{in}, Q_1 carries only 1% of I_1?**

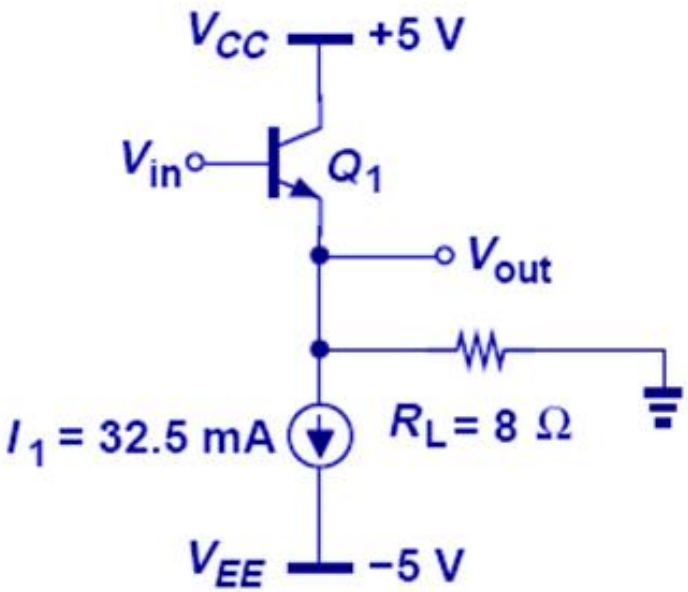

$$V_{in} = V_T \ln \frac{I_{C1}}{I_S} + \left(I_{C1} - I_1\right) R_L$$

$$\boxed{\begin{aligned} &\text{For } I_{C1} \approx 0.01 \cdot I_1 \\ &\Rightarrow V_{in} \approx 390 \text{ mV} \end{aligned}}$$

Linearity of an Emitter Follower

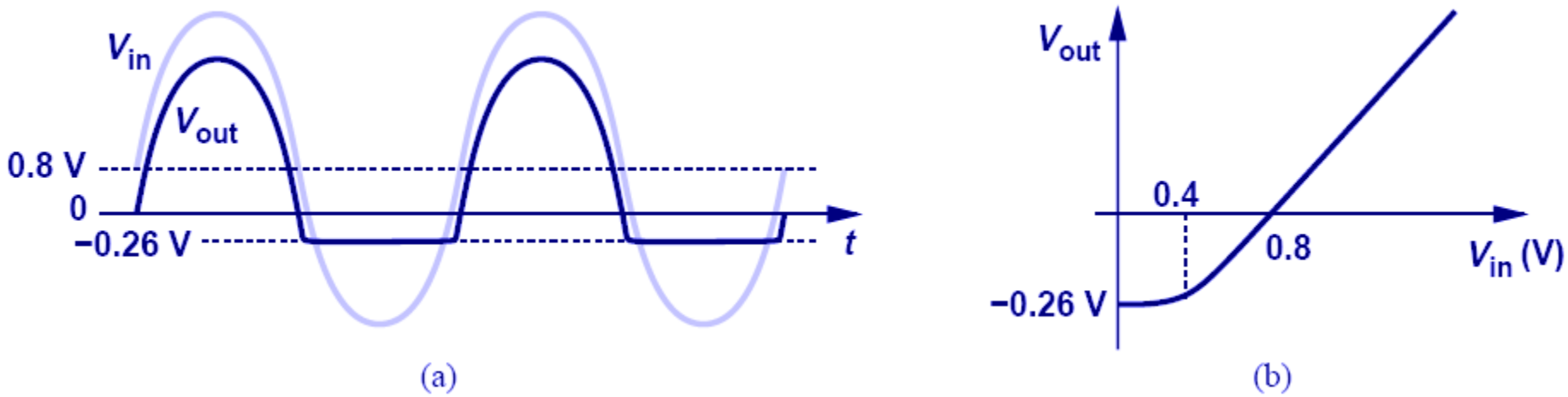

- **As V_{in} decreases the output waveform will be clipped, introducing nonlinearity in I/O characteristics.**

Push-Pull Stage

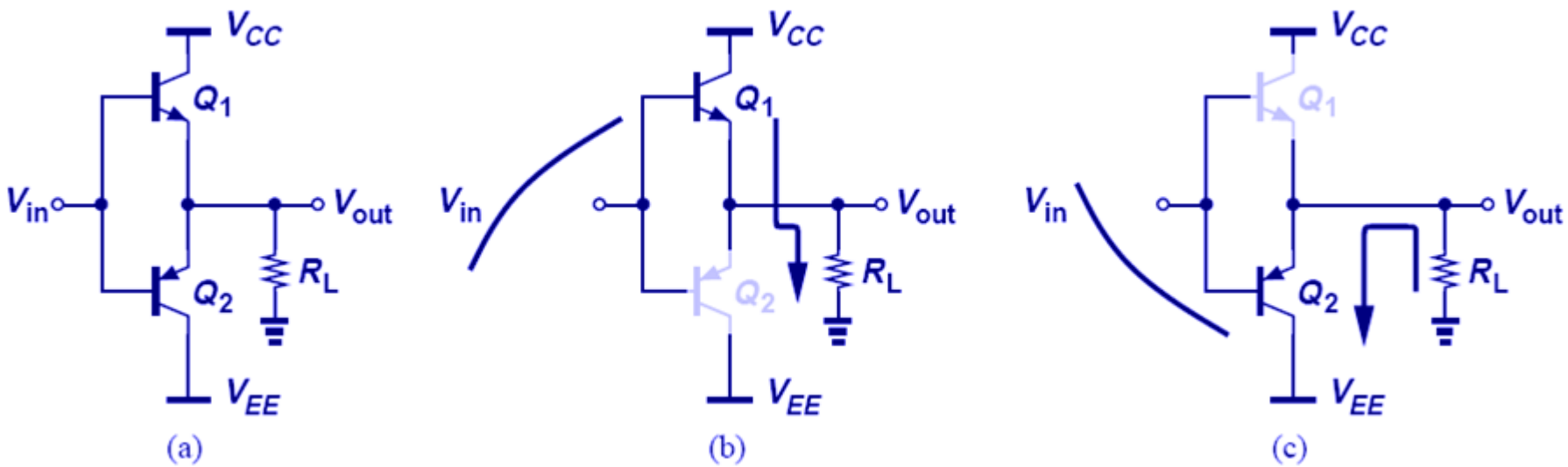

- As V_{in} increases, Q_1 is on and pushes current into R_L.
- As V_{in} decreases, Q_2 is on and pulls current out of R_L.

Example 14.2: I/O Characteristics for Large V_{in}

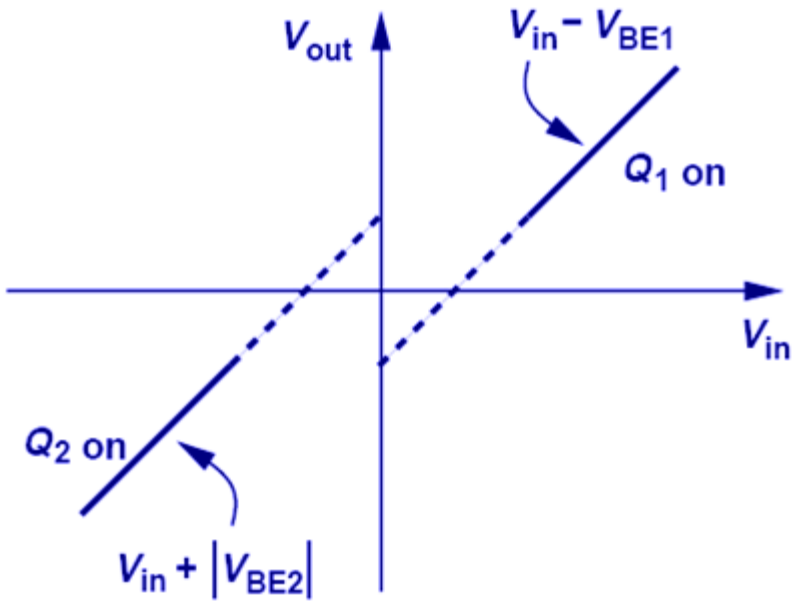

$V_{out} = V_{in} - V_{BE1}$ for large $+V_{in}$

$V_{out} = V_{in} + |V_{BE2}|$ for large $-V_{in}$

- **For positive V_{in}, Q_1 shifts the output down and for negative V_{in}, Q_2 shifts the output up.**

Overall I/O Characteristics of Push-Pull Stage

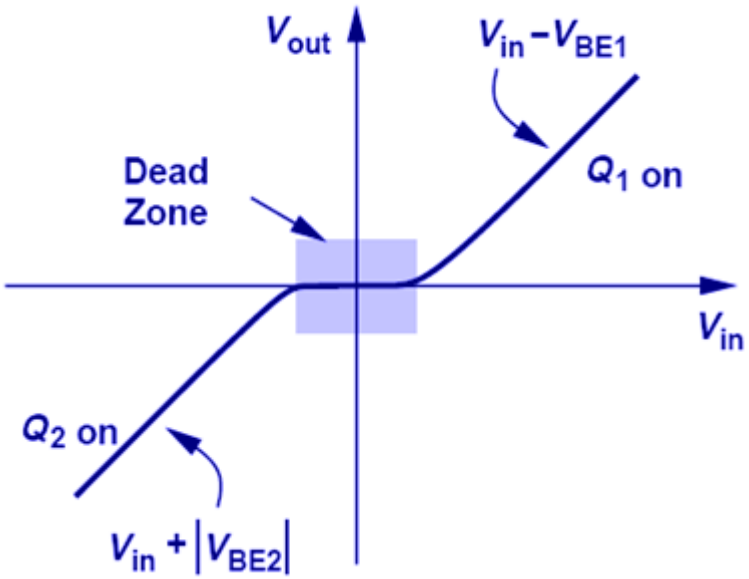

- **However, for small V_{in}, there is a "dead zone" (both Q_1 and Q_2 are off) in the I/O characteristic, resulting in gross nonlinearity.**

Example 14.3: Small-Signal Gain of Push-Pull Stage

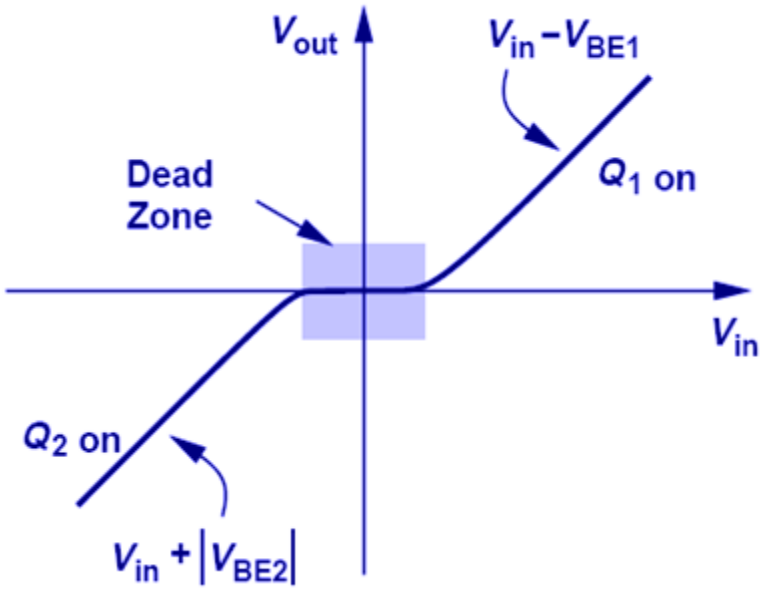

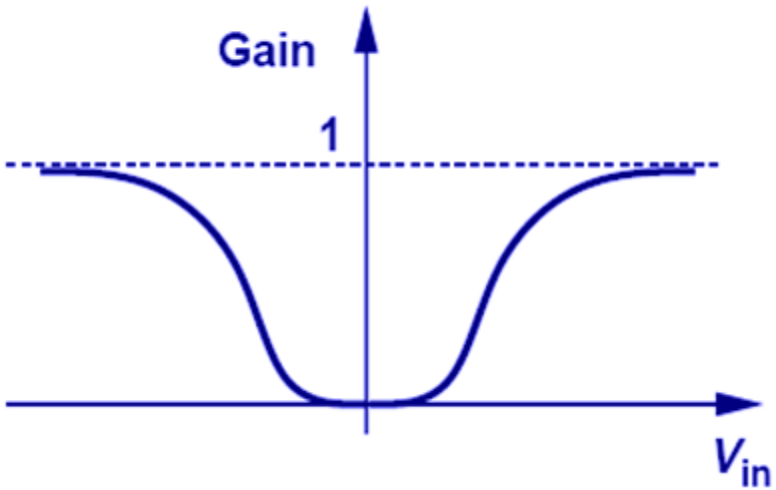

- **The push-pull stage exhibits a gain that tends to unity when either Q_1 or Q_2 is on.**
- **When V_{in} is very small, the gain drops to zero.**

Example 14.4: Sinusoidal Response of Push-Pull Stage

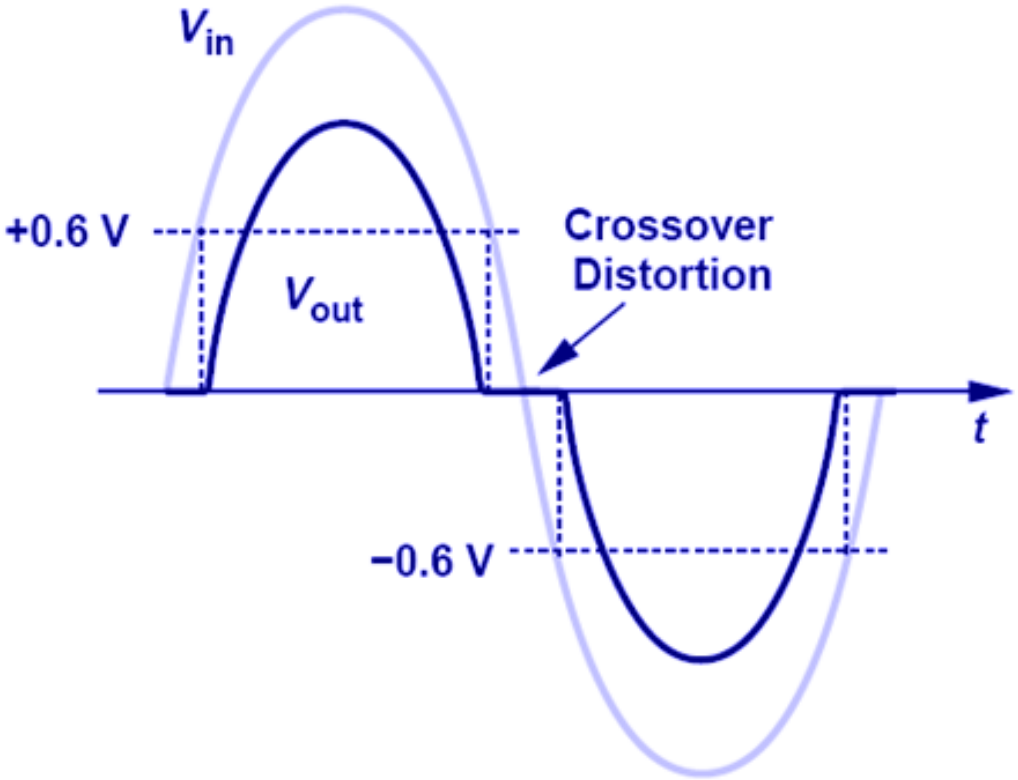

- For large V_{in}, the output follows the input with a fixed DC offset, however as V_{in} becomes small the output drops to zero and causes "Crossover Distortion."

Improved Push-Pull Stage

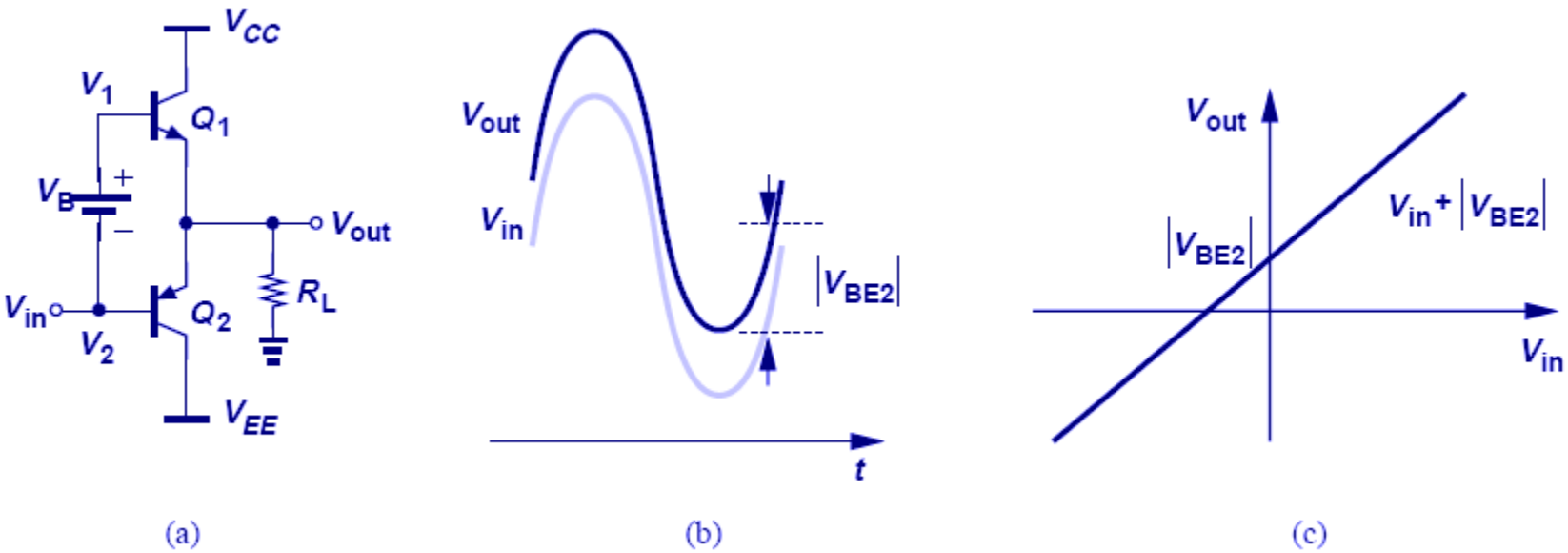

$$V_B = V_{BE1} + |V_{BE2}|$$

- **With a battery of V_B inserted between the bases of Q_1 and Q_2, the dead zone is eliminated.**

Implementation of V_B

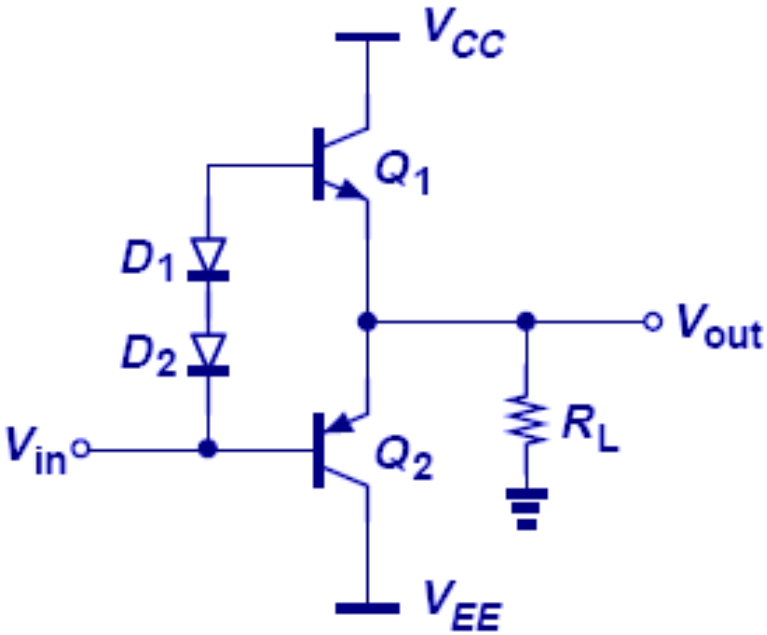

(a)

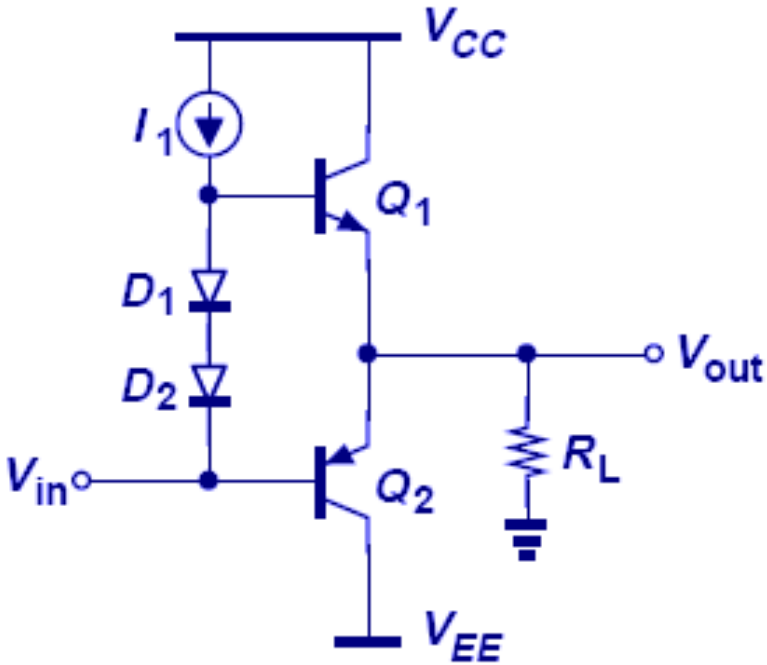

(b)

- **Since $V_B = V_{BE1} + |V_{BE2}|$, a natural choice would be two diodes in series.**
- **I_1 in figure (b) is used to bias the diodes and Q_1.**

Example 14.6: Current Flow I

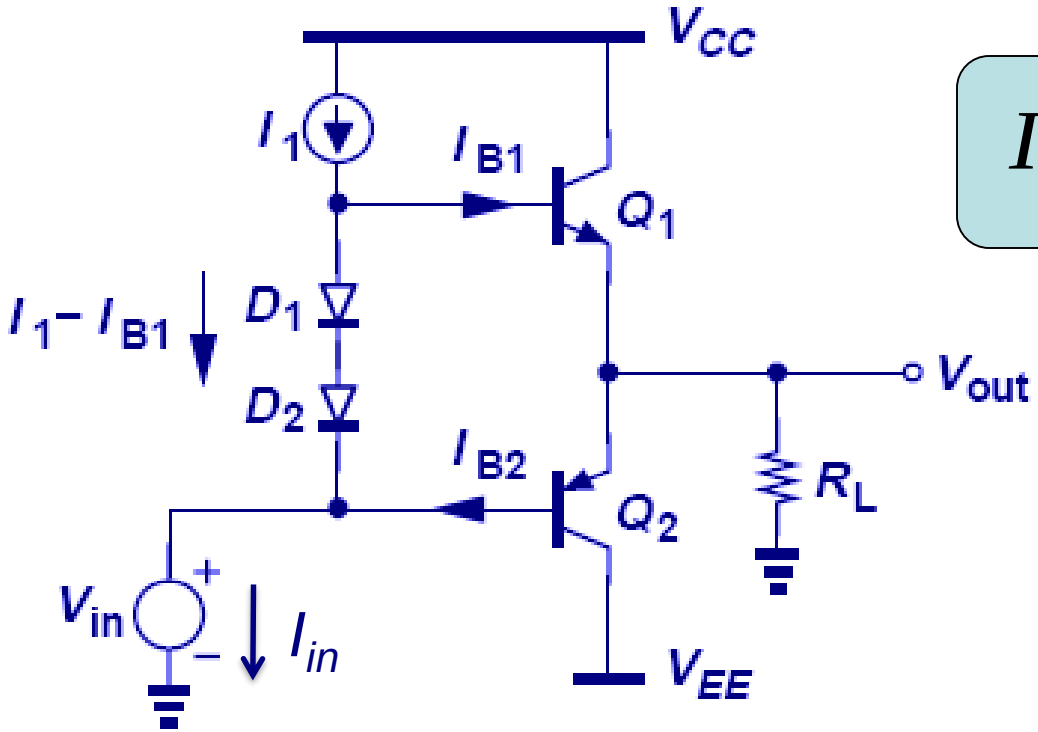

$$I_{in} = I_1 - I_{B1} + |I_{B2}|$$

Usually $I_{B1} \neq |I_{B2}|$ unless $V_{out} = 0$

I_{in} flows even when $V_{out} = 0$.

Example 14.8: Current Flow II

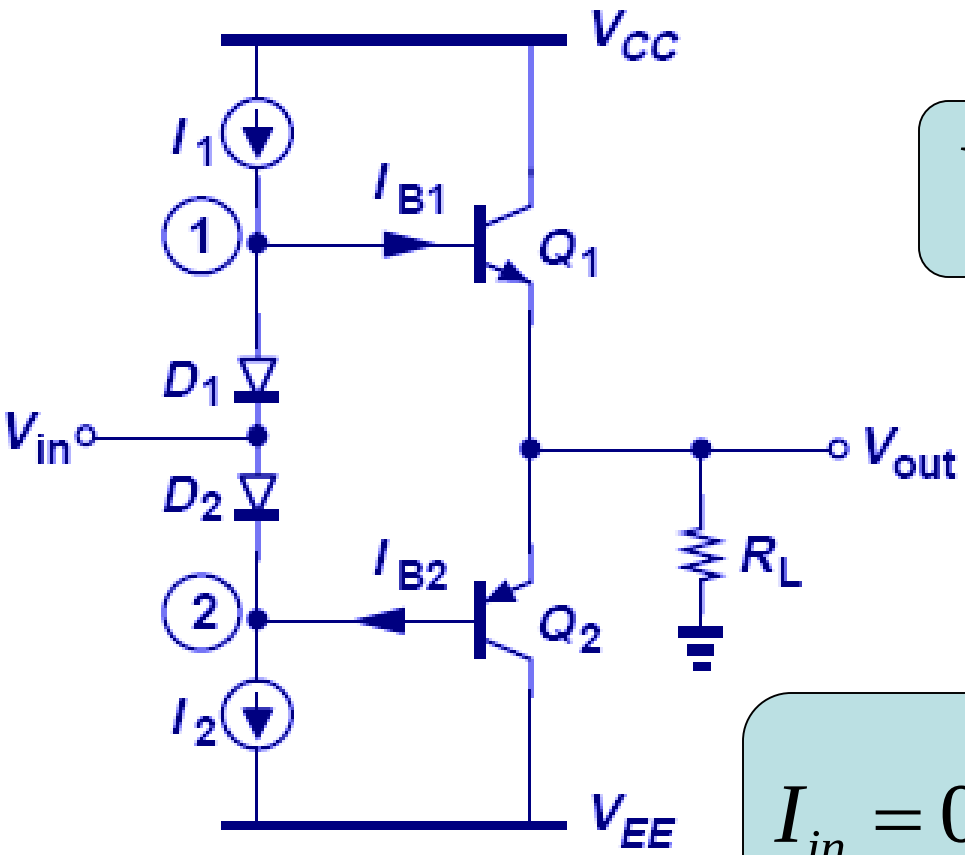

$$V_{D1} \approx V_{BE} \rightarrow V_{out} \approx V_{in}$$

$$I_{in} = 0 \text{ when } V_{out} = 0 \text{ if } I_1 = I_2$$

Addition of CE Stage

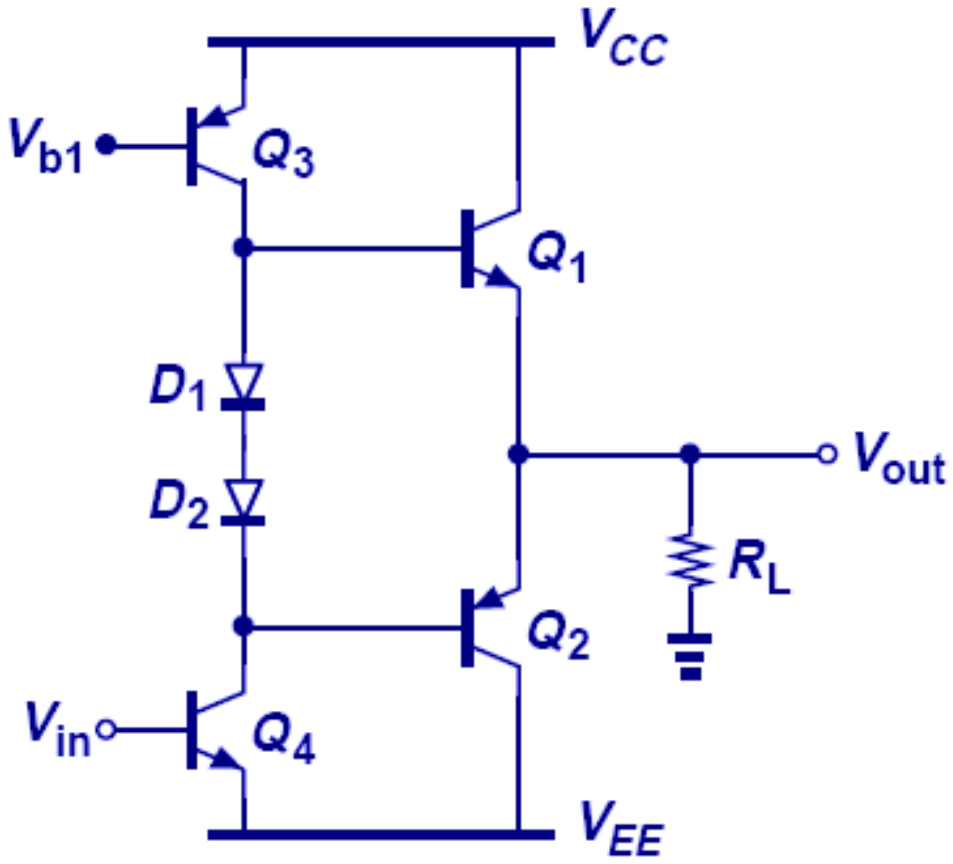

- **A CE stage (predriver) is added to provide voltage gain from the input to the bases of Q_1 and Q_2.**

Bias Point Analysis

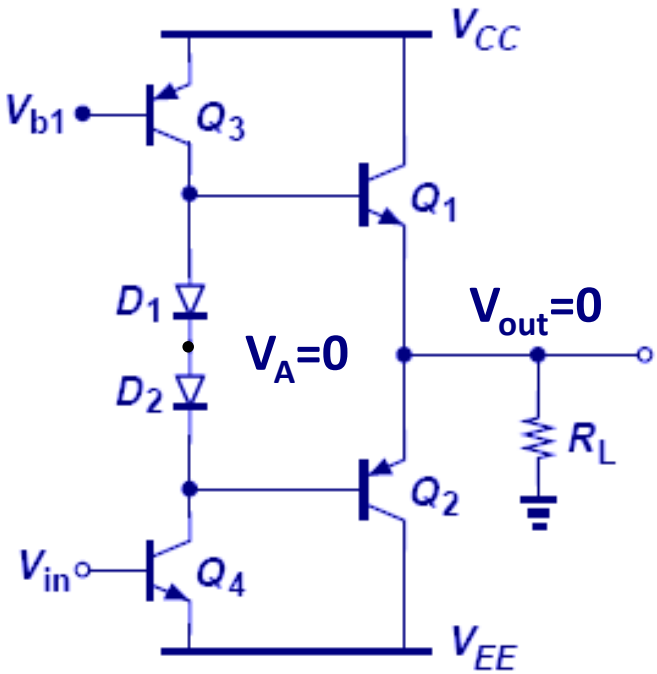

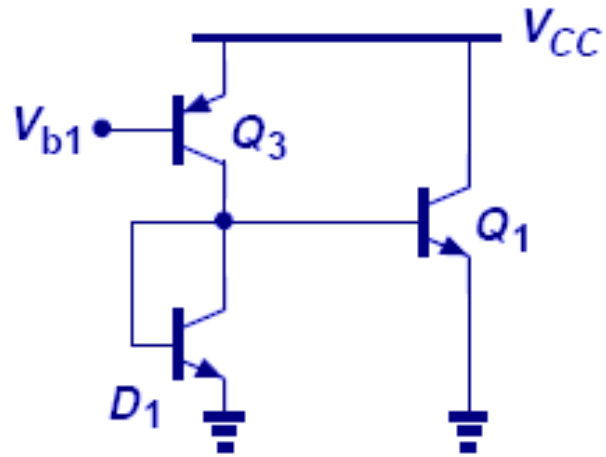

- **For bias point analysis for V_{out}=0, the circuit can be simplified to the one on the right, which resembles a current mirror.**

$$I_{C1} = \frac{I_{S,Q1}}{I_{S,D1}} \cdot \left| I_{C3} \right|$$

Small-Signal Analysis

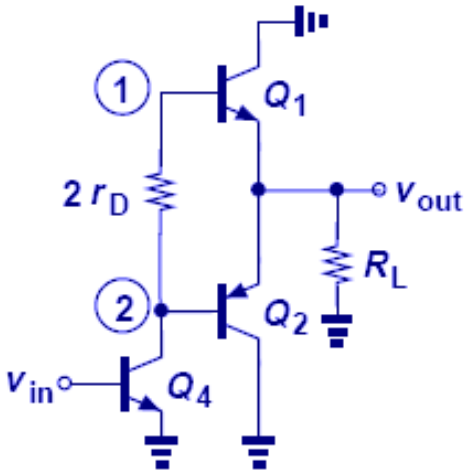

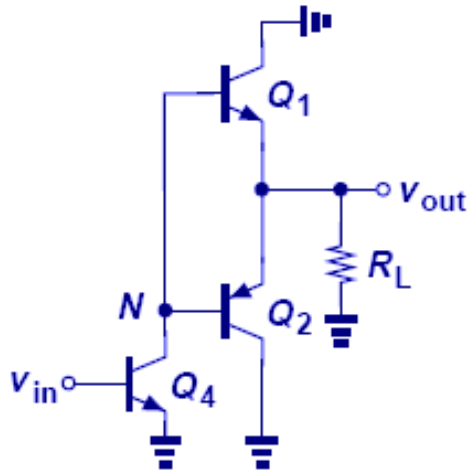

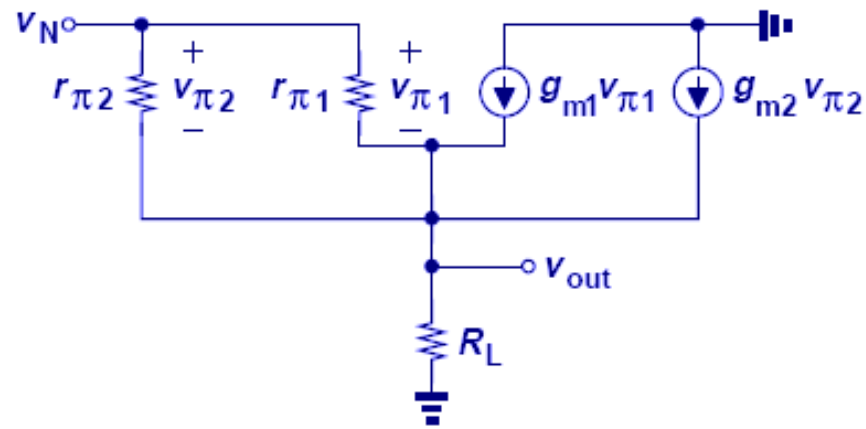

- **Assuming $2r_D$ is small and $(g_{m1}+g_{m2})R_L$ is much greater than 1,**

$$
\begin{aligned}
A_v &= -g_{m4}\left[\left(r_{\pi 1} \square r_{\pi 2}\right) + (\beta+1)R_L\right] \\
&= -g_{m4}\left[\left(r_{\pi 1} \square r_{\pi 2}\right) + \left\{\left(r_{\pi 1} \square r_{\pi 2}\right)\left(g_{m1}+g_{m2}\right)+1\right\}R_L\right] \\
&\approx -g_{m4}\left(r_{\pi 1} \square r_{\pi 2}\right)\left(g_{m1}+g_{m2}\right)R_L
\end{aligned}
$$

Example 14.9: Output Resistance Analysis

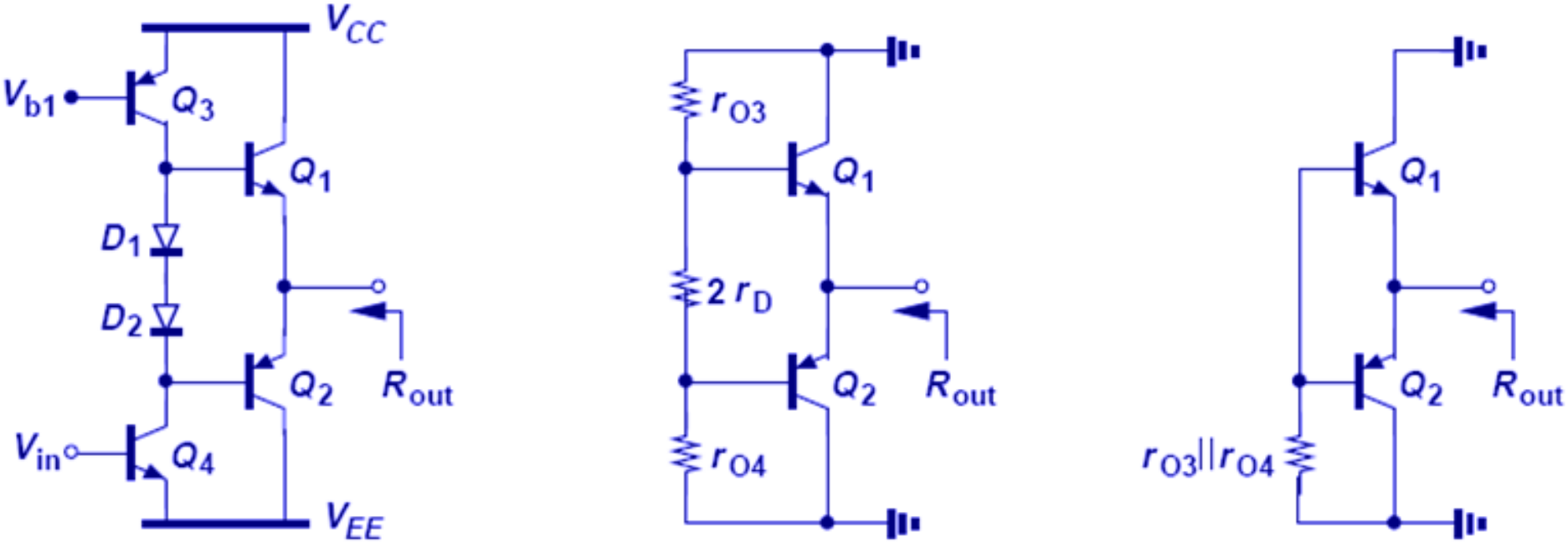

$$R_{out} \approx \frac{1}{g_{m1}+g_{m2}} + \frac{r_{O3} \| r_{O4}}{(g_{m1}+g_{m2})(r_{\pi 1} \| r_{\pi 2})}$$

- **If β is low, the second term of the output resistance will rise, which will be problematic when driving a small resistance.**

Example14.10: Biasing

- **Compute the required bias current.**

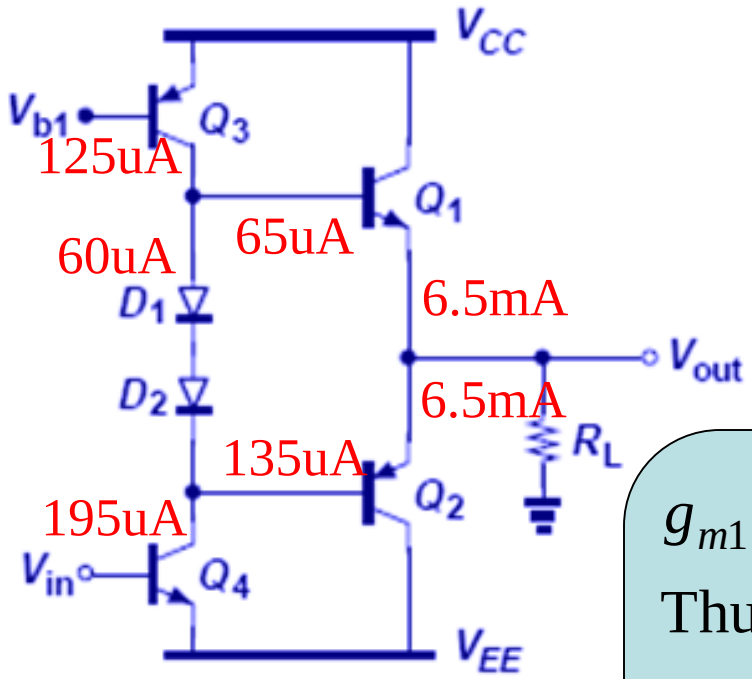

Predriver (CE stage): $A_V = 5$

Output Stage: $A_V = 0.8$ for $R_L = 8\ \Omega$

$\beta_{npn} = 2\beta_{pnp} = 100,\ I_{C1} \approx I_{C2}$

$$g_{m1} + g_{m2} = (2\ \Omega)^{-1} \Rightarrow g_{m1} \approx g_{m2} \approx (4\ \Omega)^{-1}$$

Thus, $I_{C1} \approx I_{C2} \approx 6.5$ mA

$$r_{\pi 1} \| r_{\pi 2} = 400\ \Omega \| 200\ \Omega = 133\ \Omega$$

$$g_{m4} \cdot (r_{\pi 1} \| r_{\pi 2}) \cdot \left[\cancel{1} + (g_{m1} + g_{m2}) \cdot R_L\right] = 4$$

$$\Rightarrow g_{m4} = (133\ \Omega)^{-1} \Rightarrow I_{C4} \approx 195\ \mu\text{A}$$

Problem of Base Current

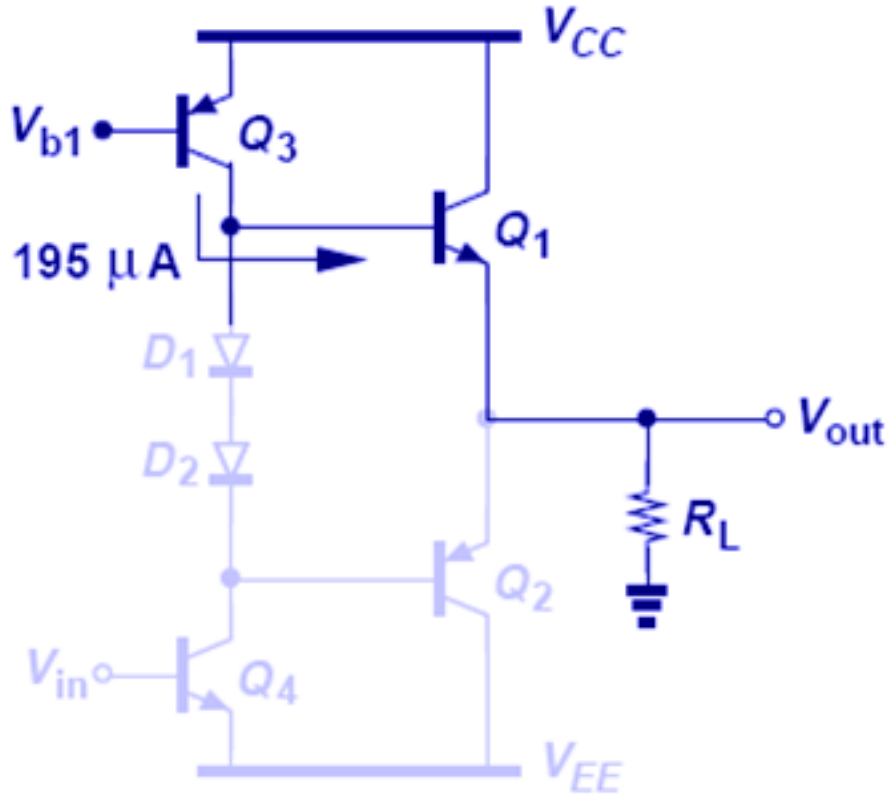

- **195 μA of base current in Q_1 can only support 19.5 mA of collector current, insufficient for high current operation (500 mA for 4 V on 8 Ω).**

Modification of the PNP Emitter Follower

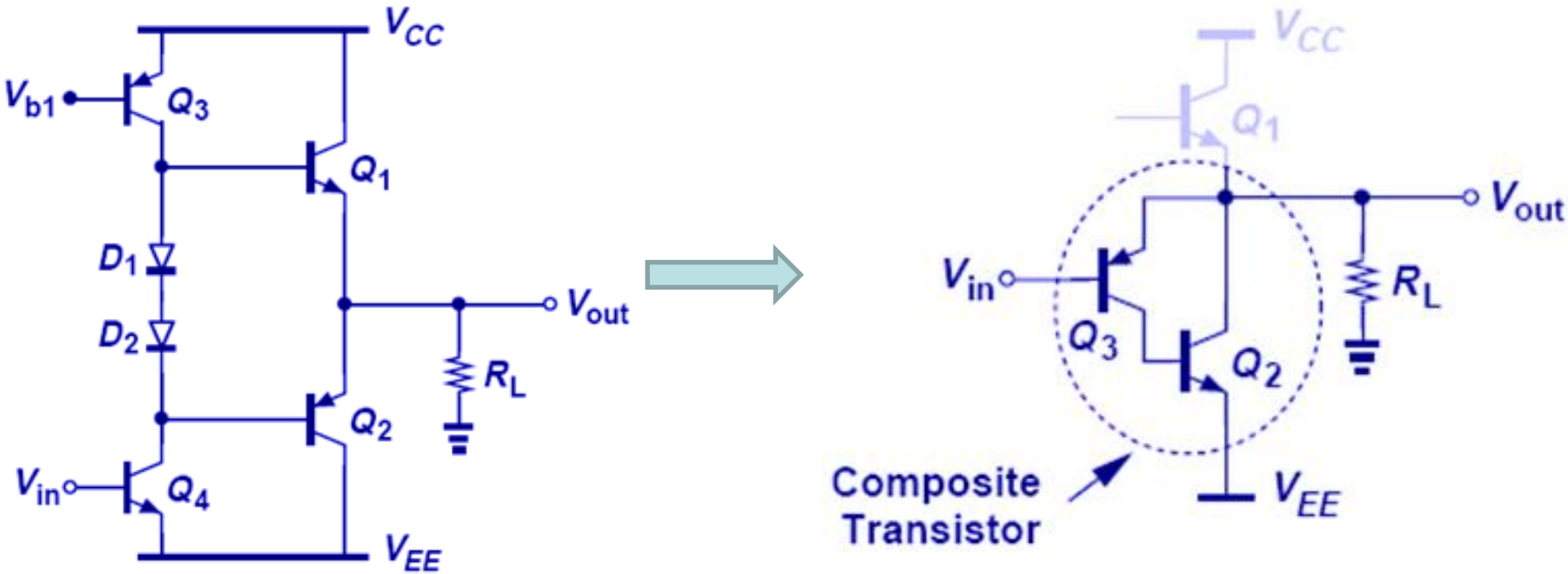

$$R_{out} \approx \frac{1}{(\beta_2 + 1) g_{m3}}$$

- **Instead of having a single PNP as the emitter-follower, it is now combined with an NPN (Q_2), providing a lower output resistance.**

Example 14.11: Input Resistance

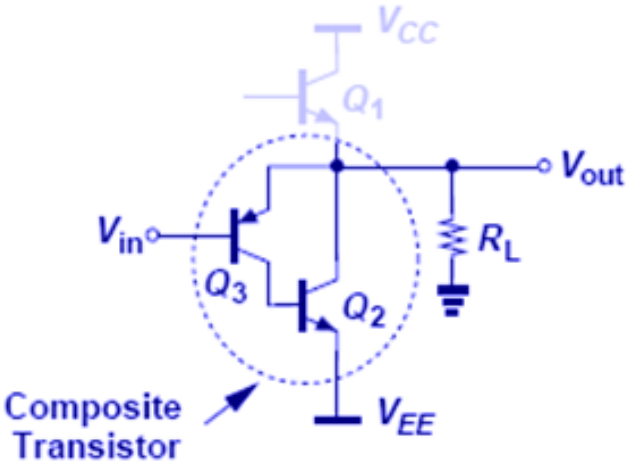

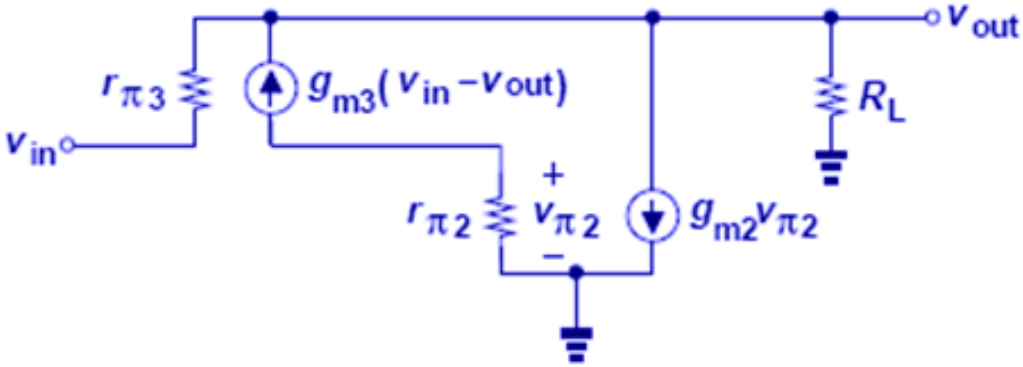

$$\frac{v_{out}}{v_{in}} = \frac{R_L}{R_L + \dfrac{1}{(\beta_2+1)g_{m3} + \dfrac{1}{r_{\pi 3}}}}$$

Comparing with the standard EF,

$$r_{out} = \frac{1}{(\beta_2+1)g_{m3} + \dfrac{1}{r_{\pi 3}}} \approx \frac{1}{(\beta_2+1)g_{m3}}$$

Example 14.11: Input Resistance

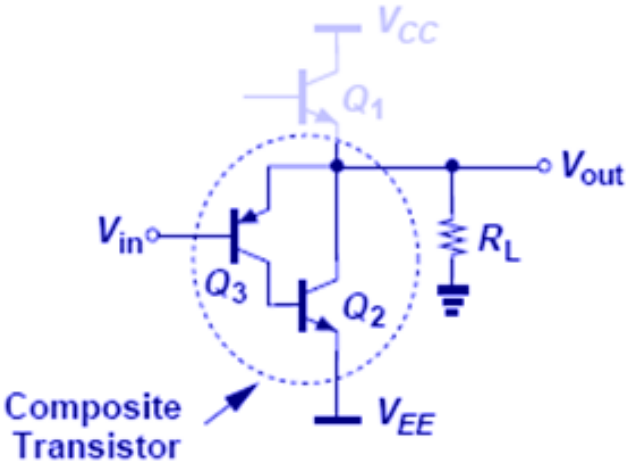

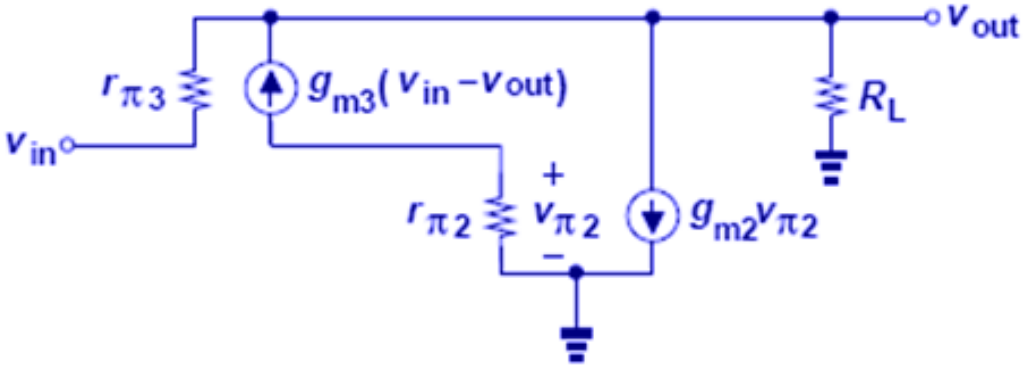

$$i_{in} = \frac{1}{r_{\pi 3}}\left(v_{in} - v_{in}\frac{R_L}{R_L + \dfrac{1}{(\beta_2 + 1)g_{m3}}} \right)$$

$$r_{in} = \beta_3(\beta_2 + 1)R_L + r_{\pi 3}$$

Additional Bias Current

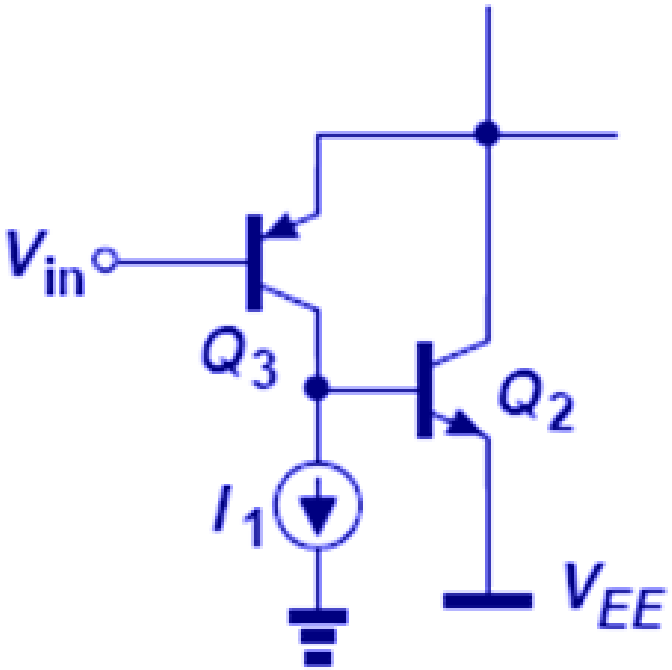

- **I_1 is added to the base of Q_2 to provide an additional bias current to Q_3 so the capacitance at the base of Q_2 can be charged/discharged quickly. Additional pole at the base of Q_2.**

Example 14.12: Minimum V_{in}

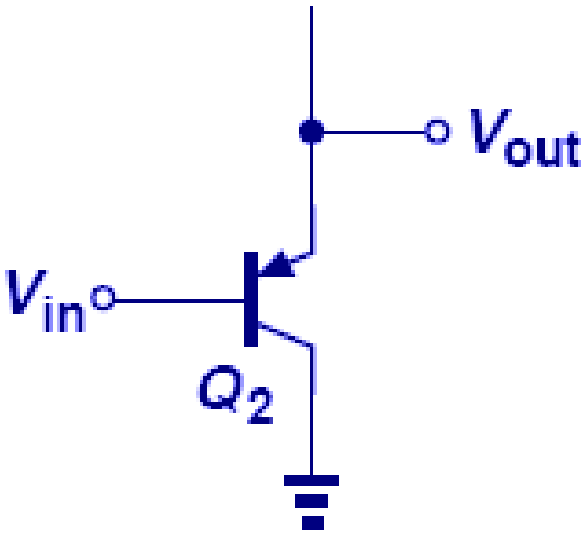

(a)

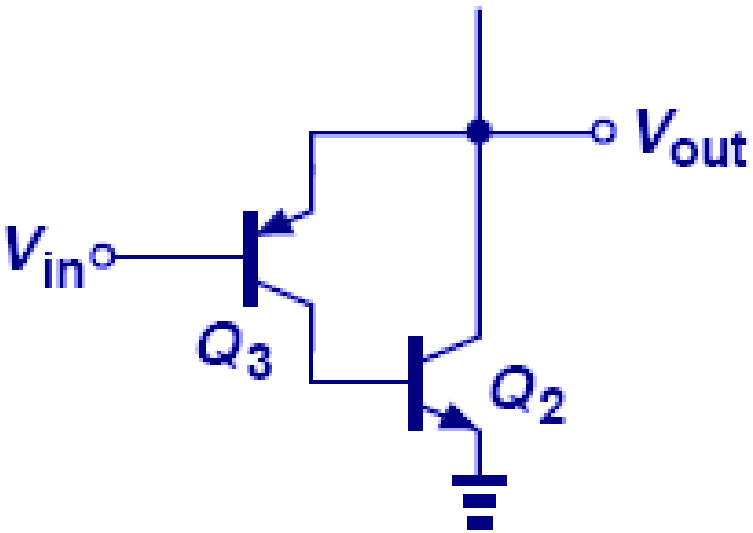

(b)

$$Min\, V_{in} \approx 0$$
$$V_{out} \approx |V_{EB2}|$$

$$Min\, V_{in} \approx V_{BE2}$$
$$V_{out} \approx |V_{EB3}| + V_{BE2}$$

Power Amplifier Classes

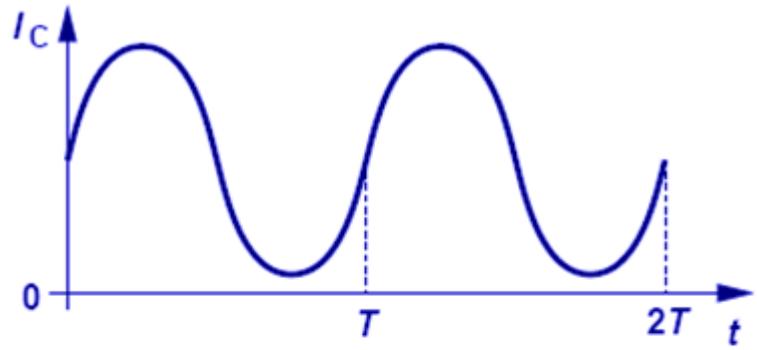

(a)

Class A: High linearity, low efficiency

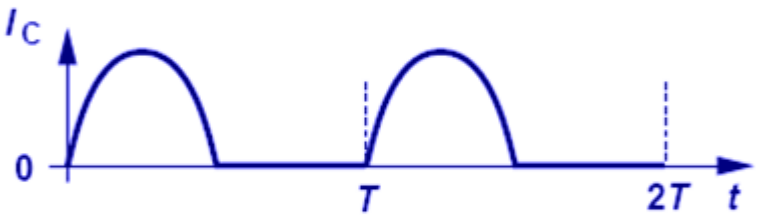

(b)

Class B: High efficiency, low linearity

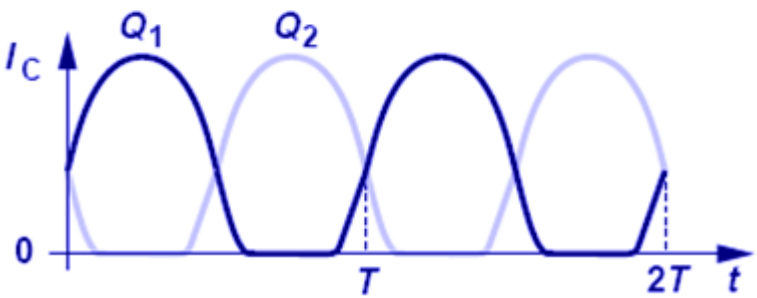

(c)

Class AB: Compromise between Class A and B

HiFi Design

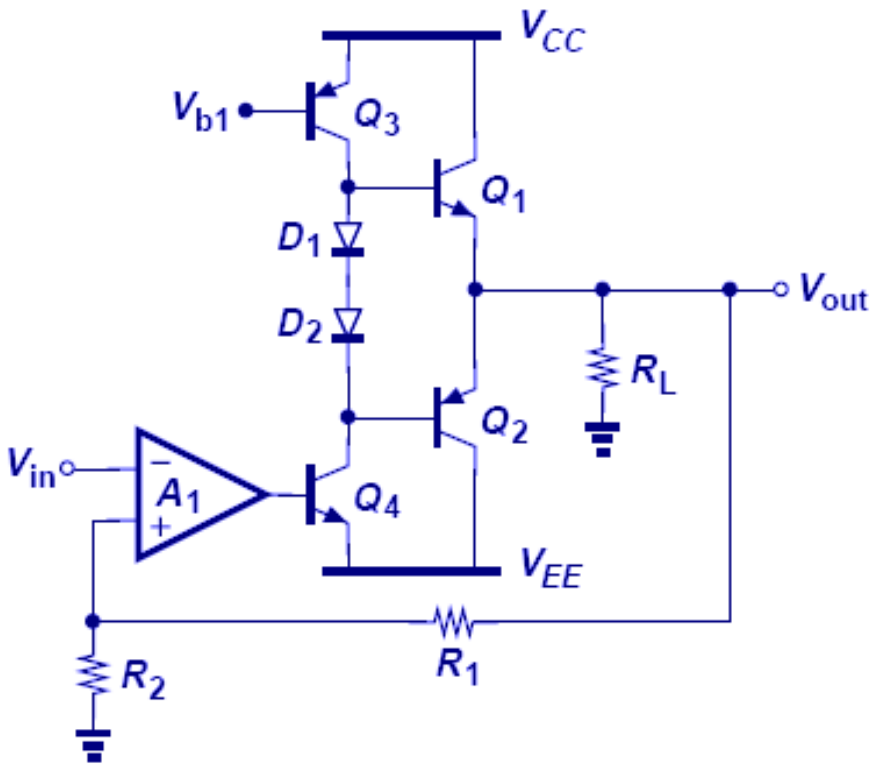

- As V_{out} becomes more positive, g_m rises and A_v comes closer to unity, resulting in nonlinearity.
- Using negative feedback, linearity is improved, providing higher fidelity.

Short-Circuit Protection

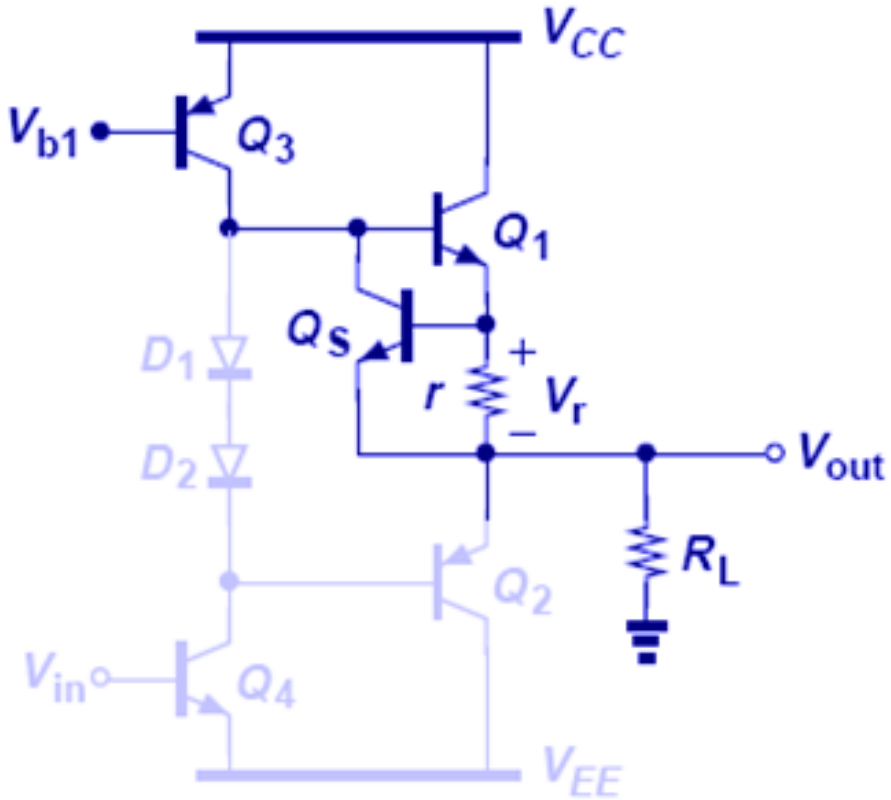

- **Q_s and r are used to "steal" some base current away from Q_1 when the output is accidentally shorted to ground, preventing short-circuit damage.**

Power transistors

➢ Package and heat sink

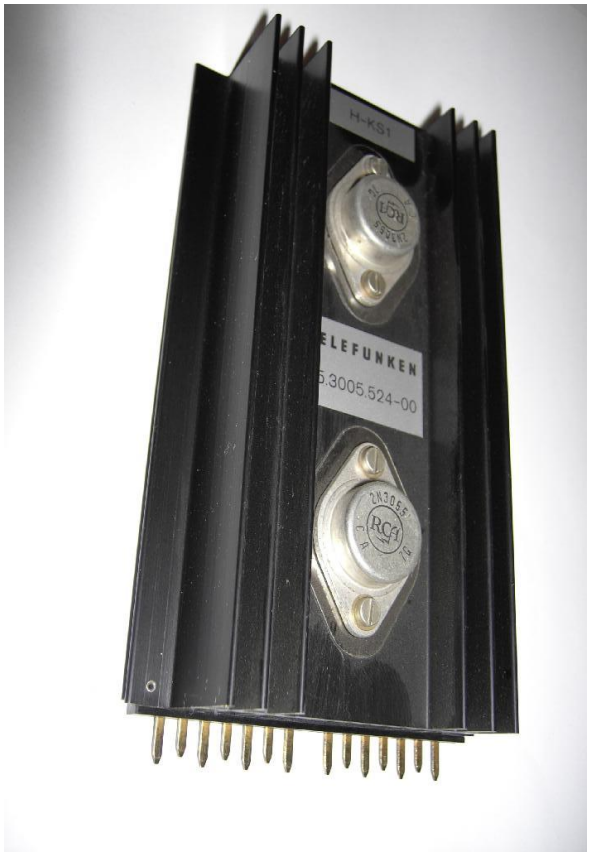

Power Transistor in Heat Sink

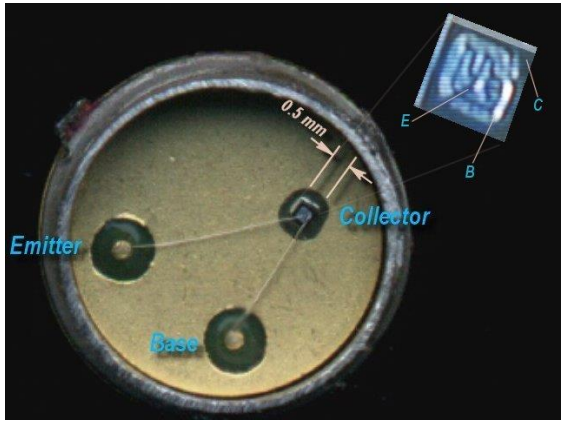

Power Transistor Inside

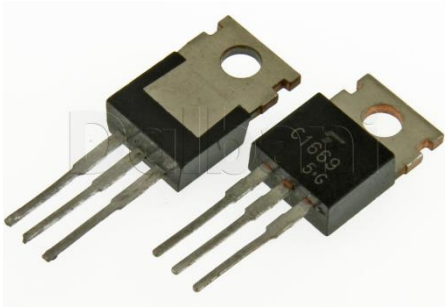

Small-signal Transistor

Emitter Follower Power Rating (Class A)

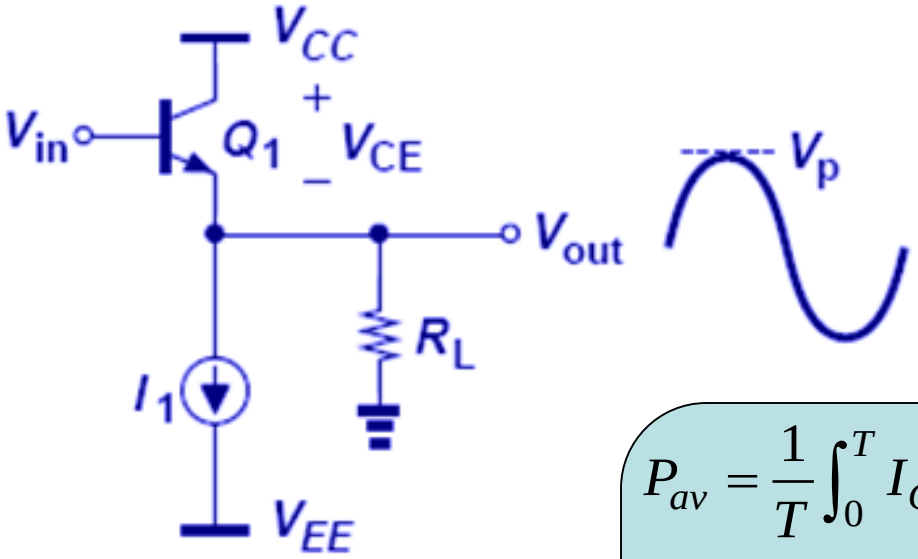

Pull down is done by a current source with huge current!

$$P_{av} = \frac{1}{T}\int_0^T I_C \cdot V_{CE}\,dt$$

$$= \frac{1}{T}\int_0^T \left(I_1 + \frac{V_P \sin \omega t}{R_L} \right) \cdot \left(V_{CC} - V_P \sin \omega t \right) dt$$

$$= I_1 \cdot V_{CC} - \frac{V_P{}^2}{R_L} = I_1 \left(V_{CC} - \frac{V_P}{2} \right) \text{ if } I_1 = \frac{V_P}{R_L}$$

- **Maximum power dissipated across Q_1 occurs in the *absence* of a signal.**

Example 14.13: Power Dissipation

- **Avg Power Dissipated in the Current Source I_1**

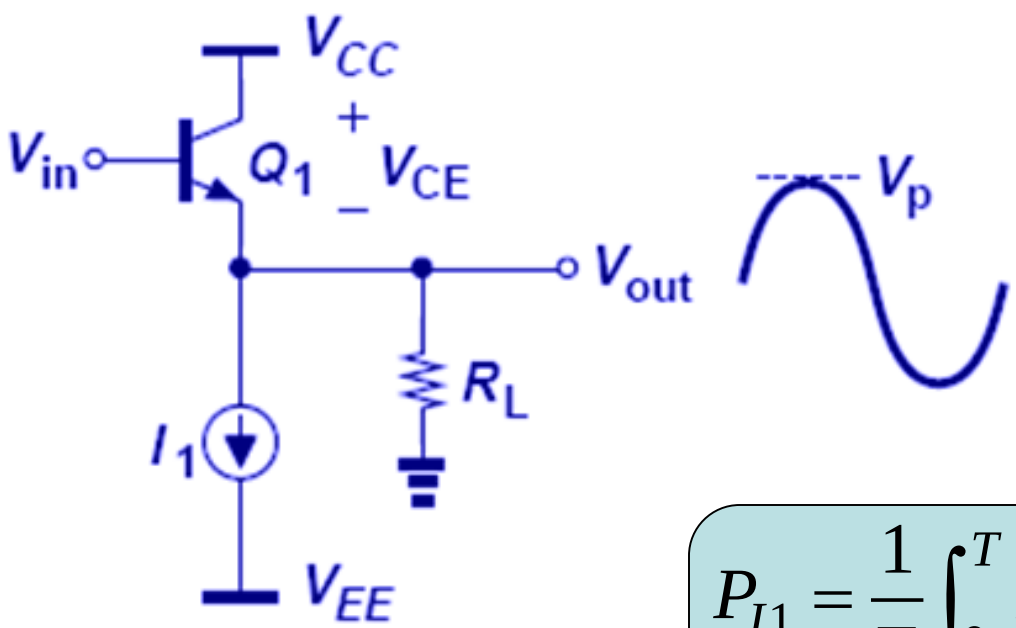

$$P_{I1} = \frac{1}{T}\int_0^T I_1\left(V_p \sin \omega t - V_{EE}\right)dt$$
$$= -I_1 \cdot V_{EE}$$

Push-Pull Stage Power Rating

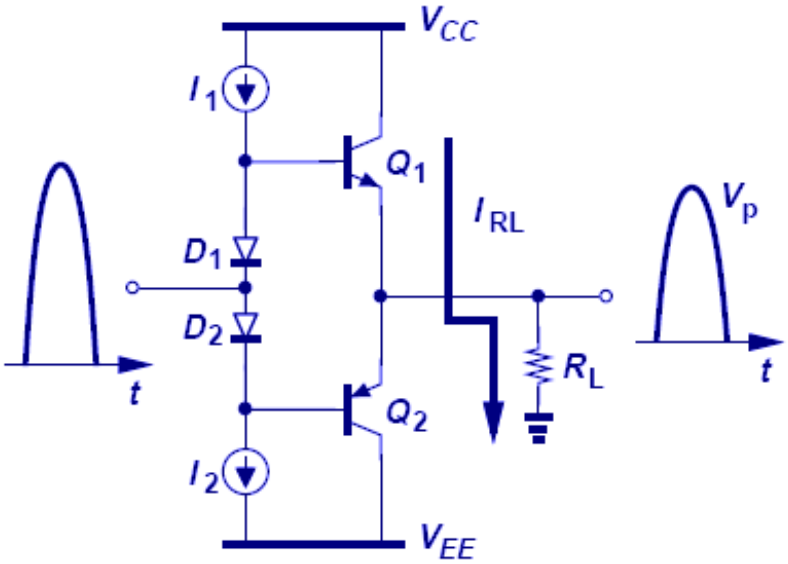

(a)

$$P_{av,NPN} = \frac{1}{T}\int_0^{T/2} I_C \cdot V_{CE}\,dt$$

$$= \frac{1}{T}\int_0^{T/2} \left(V_{CC} - V_P \sin\omega t\right) \cdot \frac{V_P \sin\omega t}{R_L}\,dt$$

$$= \frac{V_{CC} \cdot V_P}{\pi R_L} - \frac{V_P{}^2}{4R_L} = \frac{V_P}{R_L}\left(\frac{V_{CC}}{\pi} - \frac{V_P}{4}\right)$$

- **No power for half of the period.**

Push-Pull Stage Power Rating

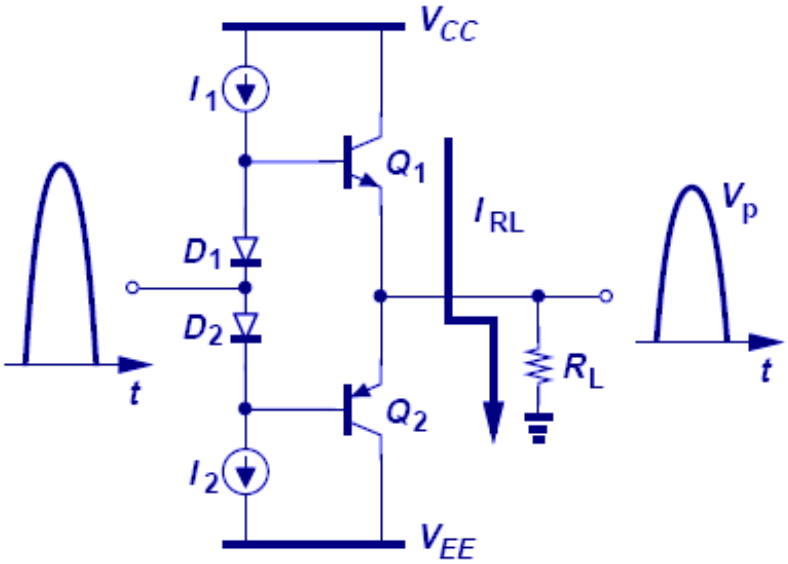

(a)

$$P_{av,NPN} = \frac{1}{T}\int_0^{T/2} I_C \cdot V_{CE}\,dt$$

$$= \frac{1}{T}\int_0^{T/2} \left(V_{CC} - V_P \sin\omega t\right) \cdot \frac{V_P \sin\omega t}{R_L}\,dt$$

$$= \frac{V_{CC} \cdot V_P}{\pi R_L} - \frac{V_P{}^2}{4R_L} = \frac{V_P}{R_L}\left(\frac{V_{CC}}{\pi} - \frac{V_P}{4}\right)$$

- **No power for half of the period.**
- **Maximum power occurs between V_p=0 and $4V_{cc}/\pi$.**

$$P_{av,\max} = \frac{V_{CC}{}^2 \cdot V_P}{\pi^2 R_L} \text{ when } V_P = 2 \cdot \frac{V_{CC}}{\pi}$$

Push-Pull Stage Power Rating

$$P_{av,PNP} = \frac{1}{T}\int_{T/2}^{T} |I_C| \cdot |V_{CE}| dt$$

$$= \frac{1}{T}\int_{T/2}^{T} (V_P \sin \omega t - V_{EE}) \cdot \left(-\frac{V_P \sin \omega t}{R_L} \right) dt$$

$$= \frac{-V_{EE} \cdot V_P}{\pi R_L} - \frac{V_P^{\ 2}}{4R_L} = \frac{V_P}{R_L}\left(\frac{-V_{EE}}{\pi} - \frac{V_P}{4} \right)$$

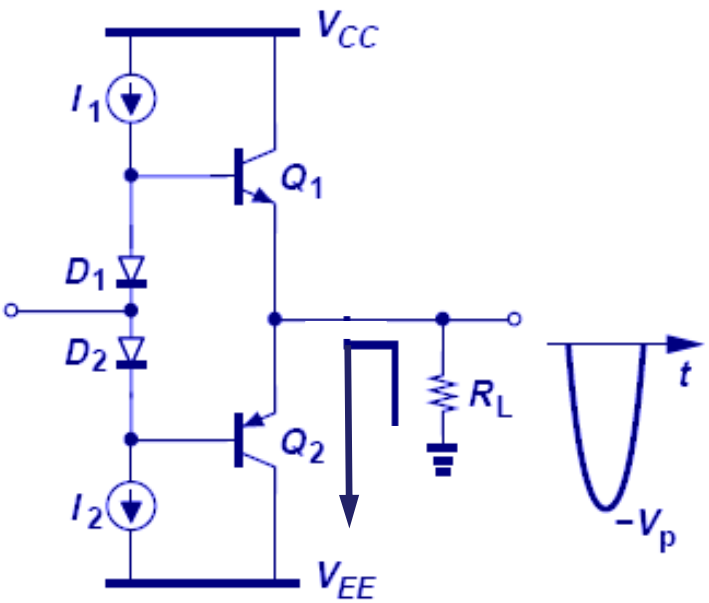

(b)

- **Maximum power occurs between V_p=0 and $4V_{CC}/\pi$.**

$$P_{av,\max} = \frac{V_{CC}^{\ 2} \cdot V_P}{\pi^2 R_L} \text{ when } V_P = 2 \cdot \frac{V_{CC}}{\pi}$$

Heat Sink

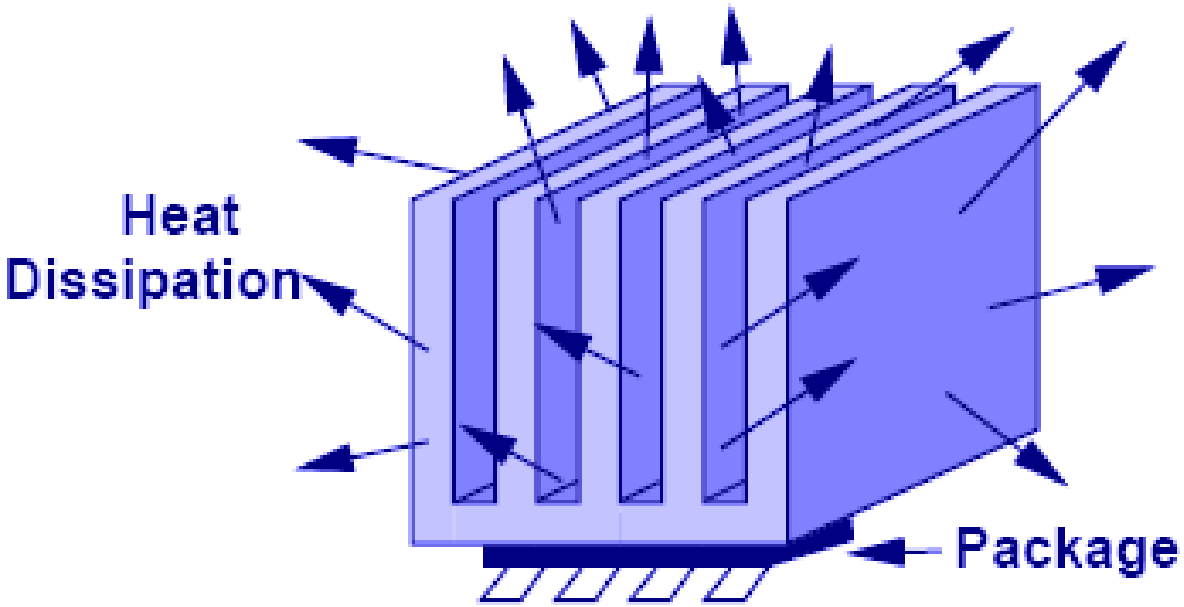

- **Heat sink, provides large surface area to dissipate heat from the chip.**

Thermal Runaway Mitigation

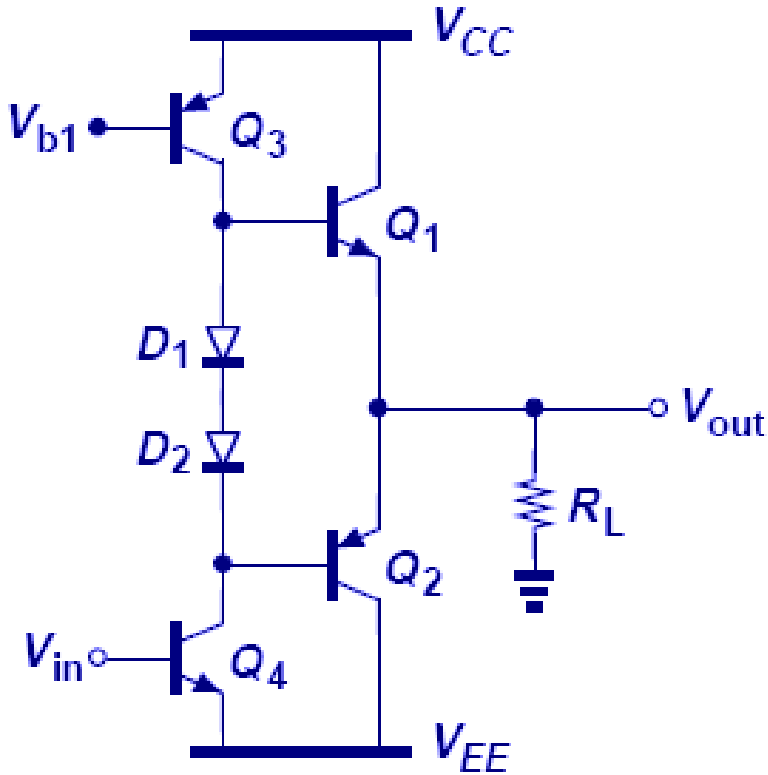

$$V_{D1} + V_{D2} = V_T \ln \frac{I_{D1}}{I_{S,D1}} + V_T \ln \frac{I_{D2}}{I_{S,D2}}$$

$$= V_T \ln \frac{I_{D1} I_{D2}}{I_{S,D1} I_{S,D2}}$$

$$V_{BE1} + V_{BE2} = V_T \ln \frac{I_{C1}}{I_{S,Q1}} + V_T \ln \frac{I_{C2}}{I_{S,Q2}}$$

$$= V_T \ln \frac{I_{C1} I_{C2}}{I_{S,Q1} I_{S,Q2}}$$

With the same V_T,

$$\frac{I_{D1} I_{D2}}{I_{S,D1} I_{S,D2}} = \frac{I_{C1} I_{C2}}{I_{S,Q1} I_{S,Q2}}$$

- **Using diode biasing prevents thermal runaway since the currents in Q_1 and Q_2 will track those of D_1 and D_2 as long as their I_s's track with temperature.**

Efficiency

- **Efficiency is defined as the average power delivered to the load divided by the power drawn from the supply**

$$\eta = \frac{\text{Power Delivered to Load}}{\text{Power Drawn From Supply Voltage}} = \frac{P_{out}}{P_{out} + P_{ckt}}$$

Emitter Follower (Class A)

$$\eta_{EF} = \frac{V_P^2 / 2R_L}{V_P^2 / 2R_L + I_1 \left(V_{CC} - V_P / 2\right) - I_1 \cdot V_{EE}}$$

$$= \frac{V_P}{4V_{CC}} \text{ if } I_1 = \frac{V_P}{R_L} \text{ and } -V_{EE} = V_{CC}$$

- **Maximum efficiency for EF is 25%.**

Example 14.15: Efficiency of EF

- **EF designed for full swing operates with half swing.**

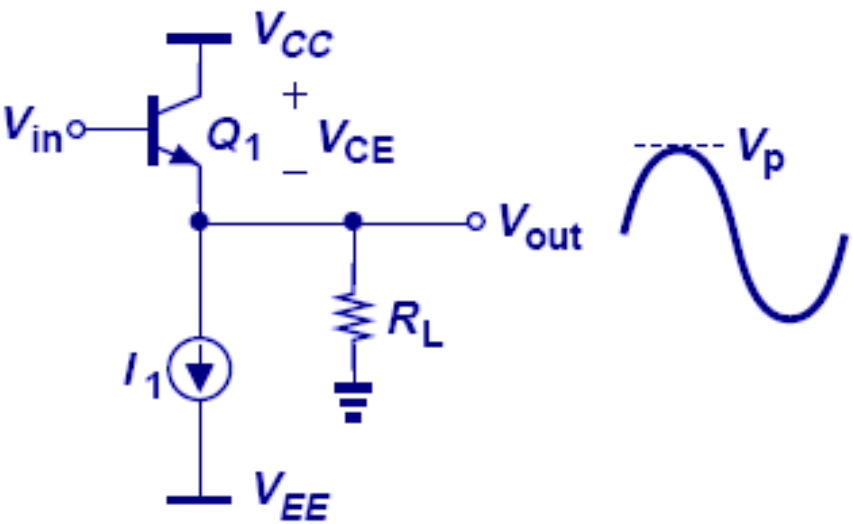

With $I_1 = \dfrac{V_P}{R_L} = \dfrac{V_{CC}}{R_L}$ and $-V_{EE} = V_{CC}$

$$\eta_{EF} = \frac{V_P^2/2R_L}{V_P^2/2R_L + I_1\left(V_{CC} - V_P/2\right) - I_1 \cdot V_{EE}}$$

$$= \frac{V_P^2/2R_L}{V_P^2/2R_L + \dfrac{V_{CC}}{R_L}\left(V_{CC} - V_P/2\right) + \dfrac{V_{CC}}{R_L} \cdot V_{CC}}$$

Thus,

$$\eta_{EF}\Big|_{V_P = V_{CC}/2} = \frac{1}{15} = 6.7\%$$

Efficiency

Push-Pull Stage (Class A or AB)

$$\eta_{PP} = \frac{\dfrac{V_P^2}{2R_L}}{\cancel{\dfrac{V_P^2}{2R_L}} + \dfrac{2V_P}{R_L}\left(\dfrac{V_{CC}}{\pi} - \cancel{\dfrac{V_P}{4}}\right)}$$

$$= \frac{\pi}{4}\frac{V_P}{V_{CC}}$$

- **Maximum efficiency for PP is 78.5%.**

Example 14.16: Efficiency incl. Predriver

$$I_1 = (V_P / R_L)/\beta$$

$$\eta = \frac{\dfrac{V_P^2}{2R_L}}{\dfrac{2V_P V_{CC}}{\pi R_L} + (V_{CC} - V_{EE})\dfrac{V_P}{\beta R_L}}$$

$$= \frac{1}{4}\frac{V_P}{V_{CC}/\pi + V_{CC}/\beta}$$

$$= \frac{1}{4}\frac{1}{\dfrac{1}{\pi} + \dfrac{1}{\beta}}\frac{V_P}{V_{CC}}$$